

FritsJurgens®

SYSTEM M/M+

MILLING AND MOUNTING MANUAL

BOX CONTENTS

COMPONENTS

1.1 Ceiling plate - Class B
1.2 Ceiling plate - Class G
2.1 Top pivot 40 mm - Class B *or* G
2.2 Top pivot 70 mm - Class B *or* G
2.3 Top pivot Cable Grommet
3.1 Bottom pivot System M 40 mm - Class AA to C *or* Bottom pivot System M+ 40 mm - Class A to E
3.2 Bottom pivot System M 70 mm - Class AA to C *or* Bottom pivot System M+ 70 mm - Class A to E
3.3 Bottom pivot System M+ 40 mm - Class F and G
3.4 Bottom pivot System M+ 70 mm - Class F and G
4.1 Floor plate System M - Squared
4.2 Floor plate System M - Round
4.3 Floor plate System M - Flush squared
4.4 Floor plate System M - Flush rounded

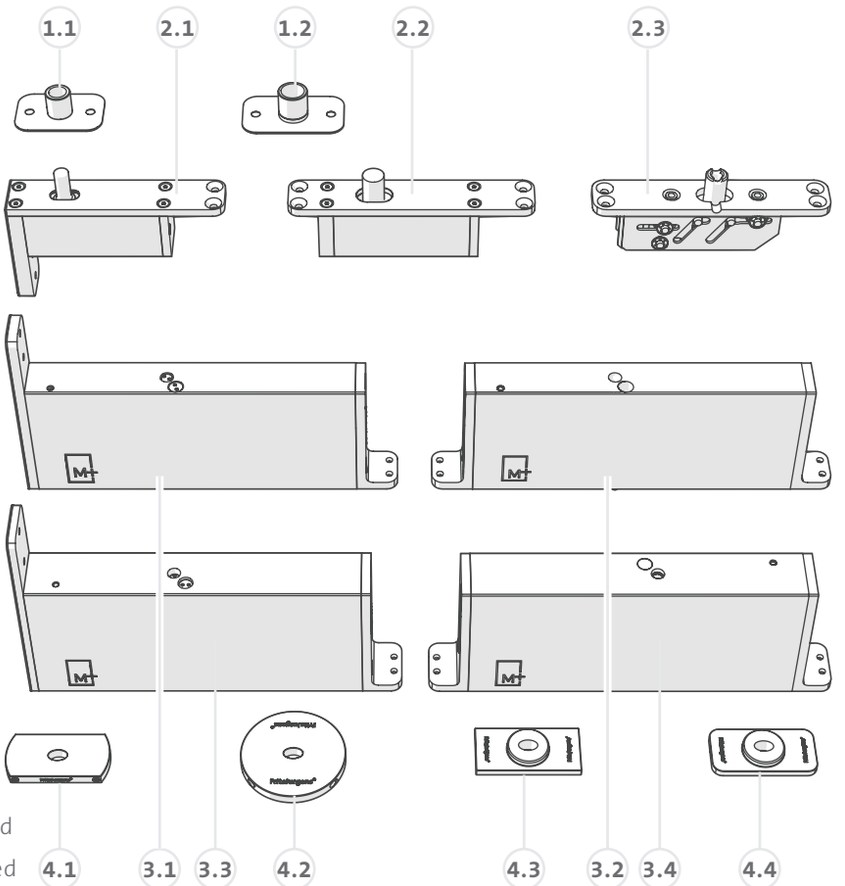

MILLING AND MOUNTING KIT

5.1 Torx bit TX20 (1x)
5.2 Screws (4x50) (10x)
5.3 Fitting adhesive
5.4 Allen key 5
5.5 Allen key 3
5.6 Mounting pins, short* (2x)
5.7 Mounting pins, long* (2x)
5.8 Fitting template
5.9 Double-sided fine-tuning sheet**
5.10 Adjustment spanner

* Only in box floor plate System M - Squared
** Only for M+

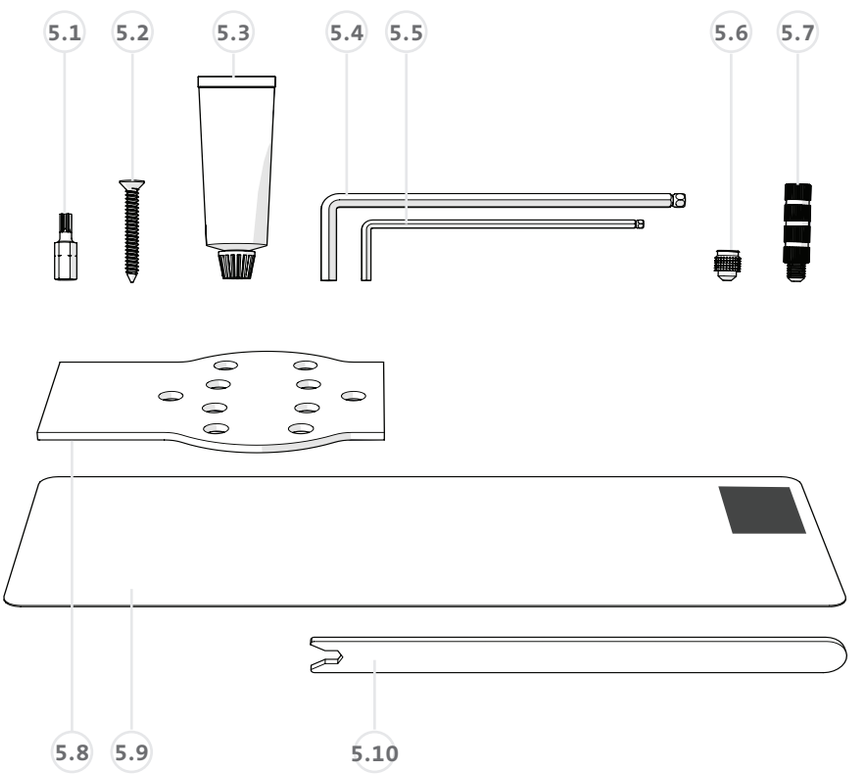

SYSTEM OVERVIEW

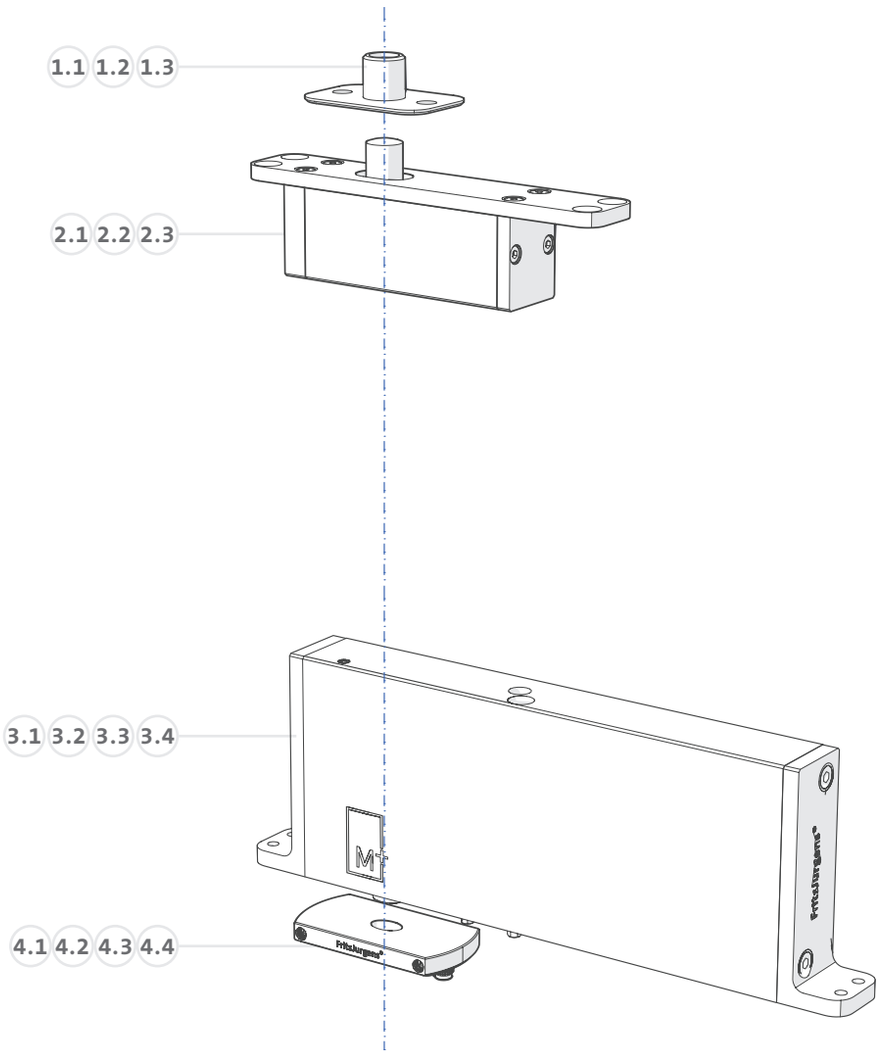

MILLING INSTRUCTIONS

→ Determine pivot point **A**.

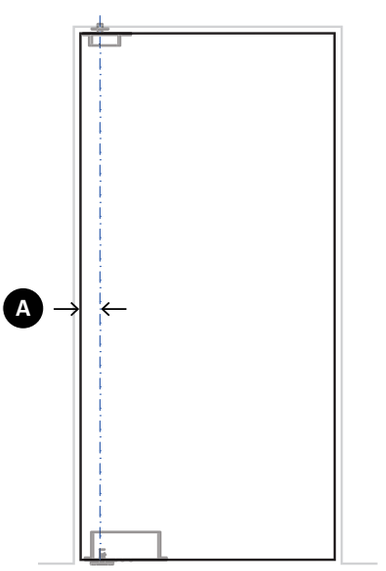

System M+/M - Class AA to E

- **A** = 40 mm → page **4**
- 70 mm ≤ **A** < 250 mm → page **6**
- **A** > 250 mm → page **12**

System M+/M - Class F and G

- **A** = 40 mm → page **8**
- 70 mm ≤ **A** < 250 mm → page **10**
- **A** > 250 mm → page **12**

Top pivot Cable Grommet → page **14**

MOUNTING INSTRUCTIONS

→ page **15**

MILLING

A = 40 MM
PREPARING THE DOOR

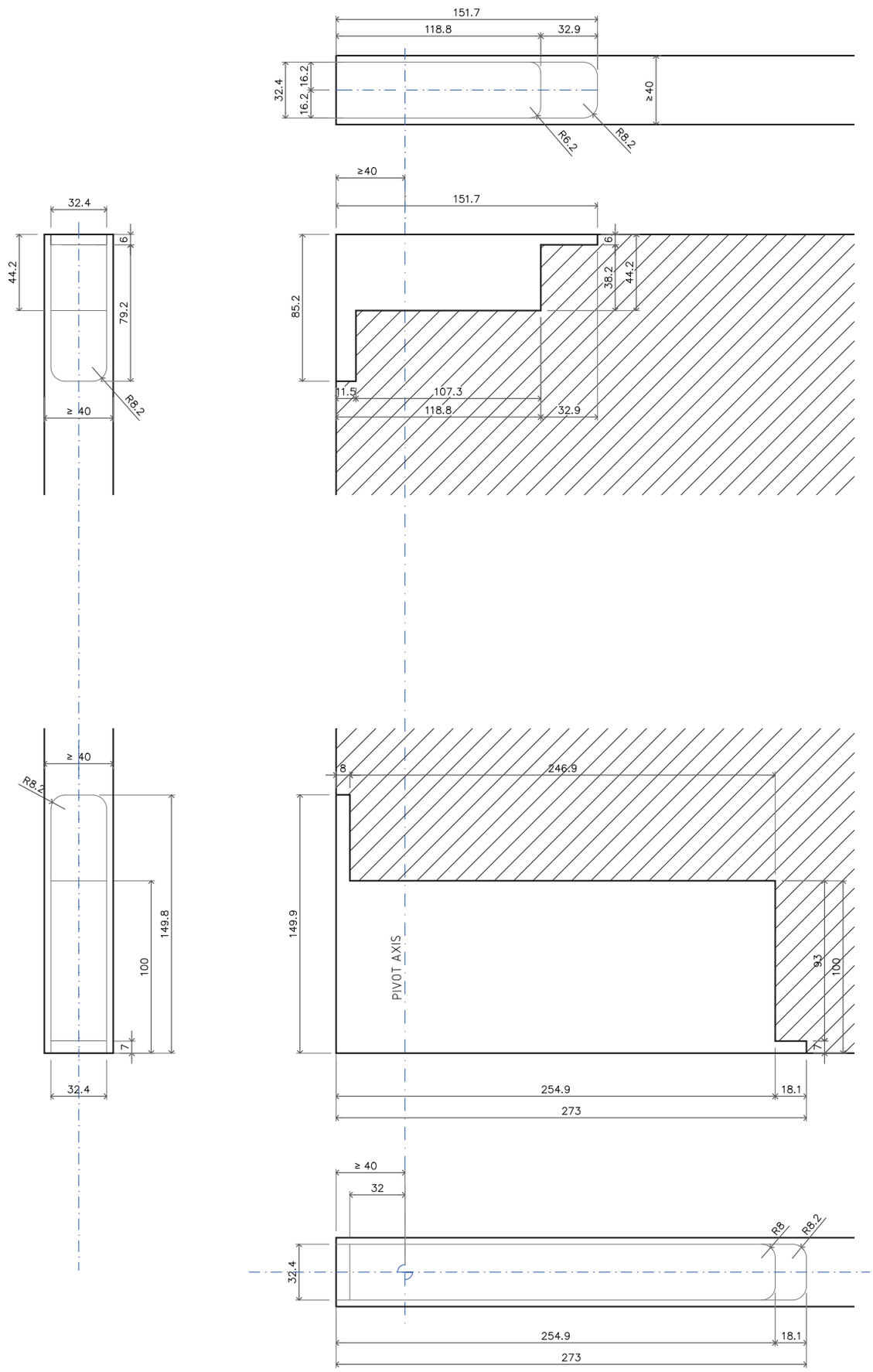

COMPONENTS

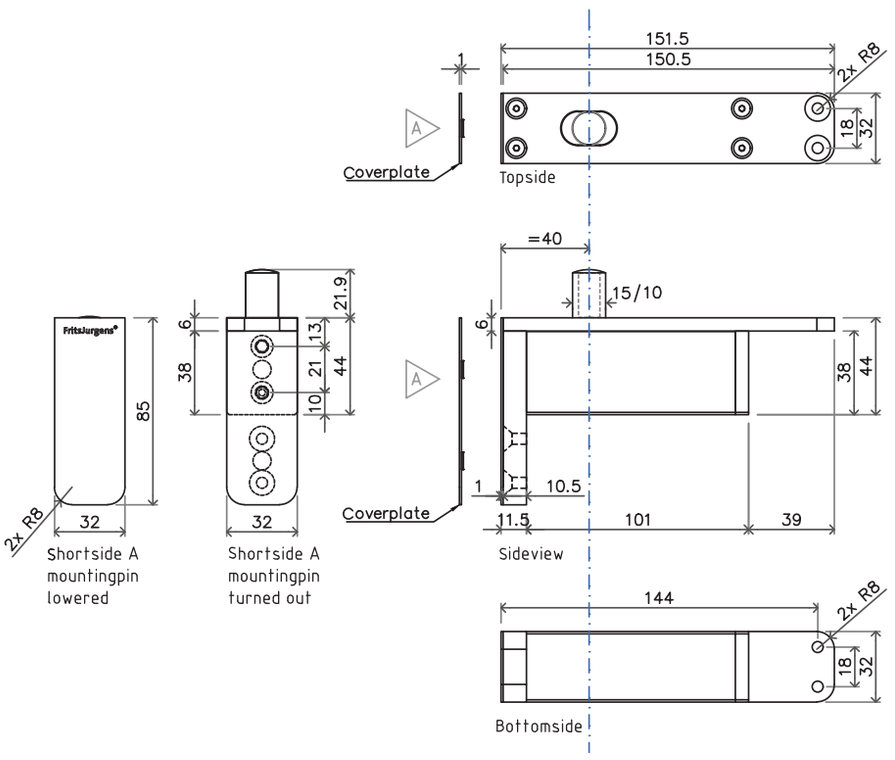

www.fritsjurgens.com/installation-tp40

Top pivot 40 mm - Class B or G

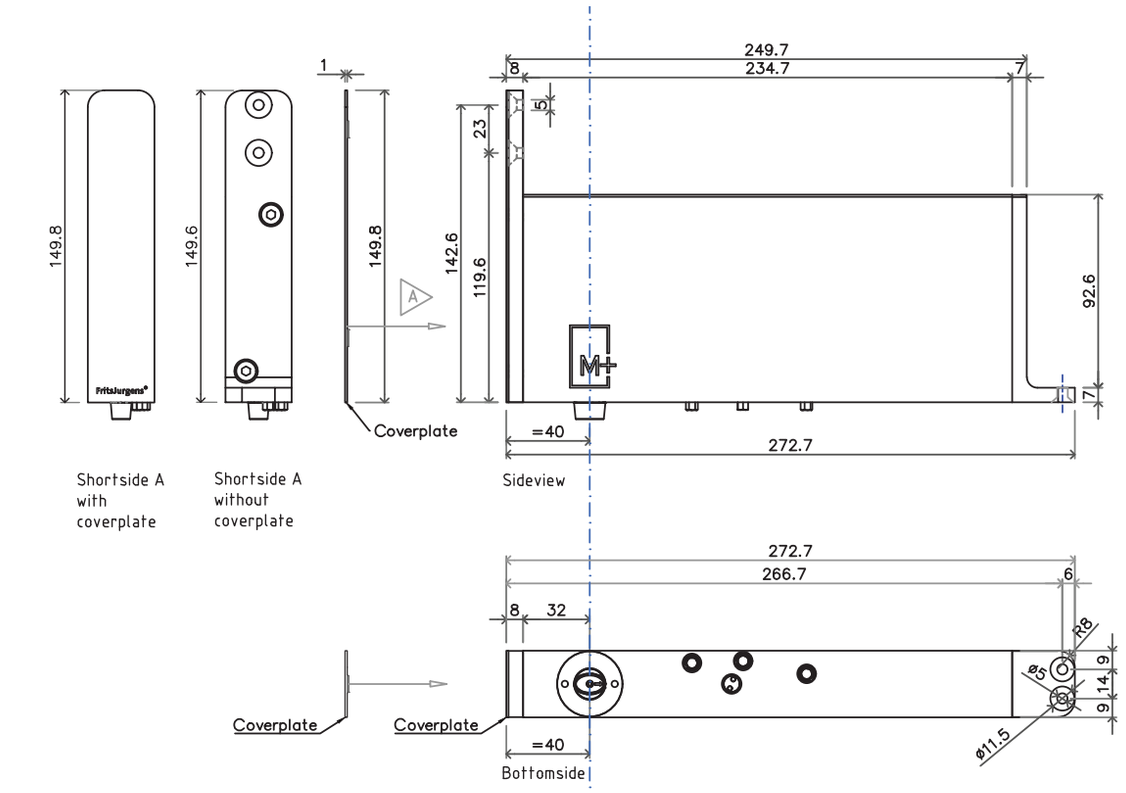

System M 40 mm

System M+ 40 mm

70MM ≤ A < 250 MM
PREPARING THE DOOR

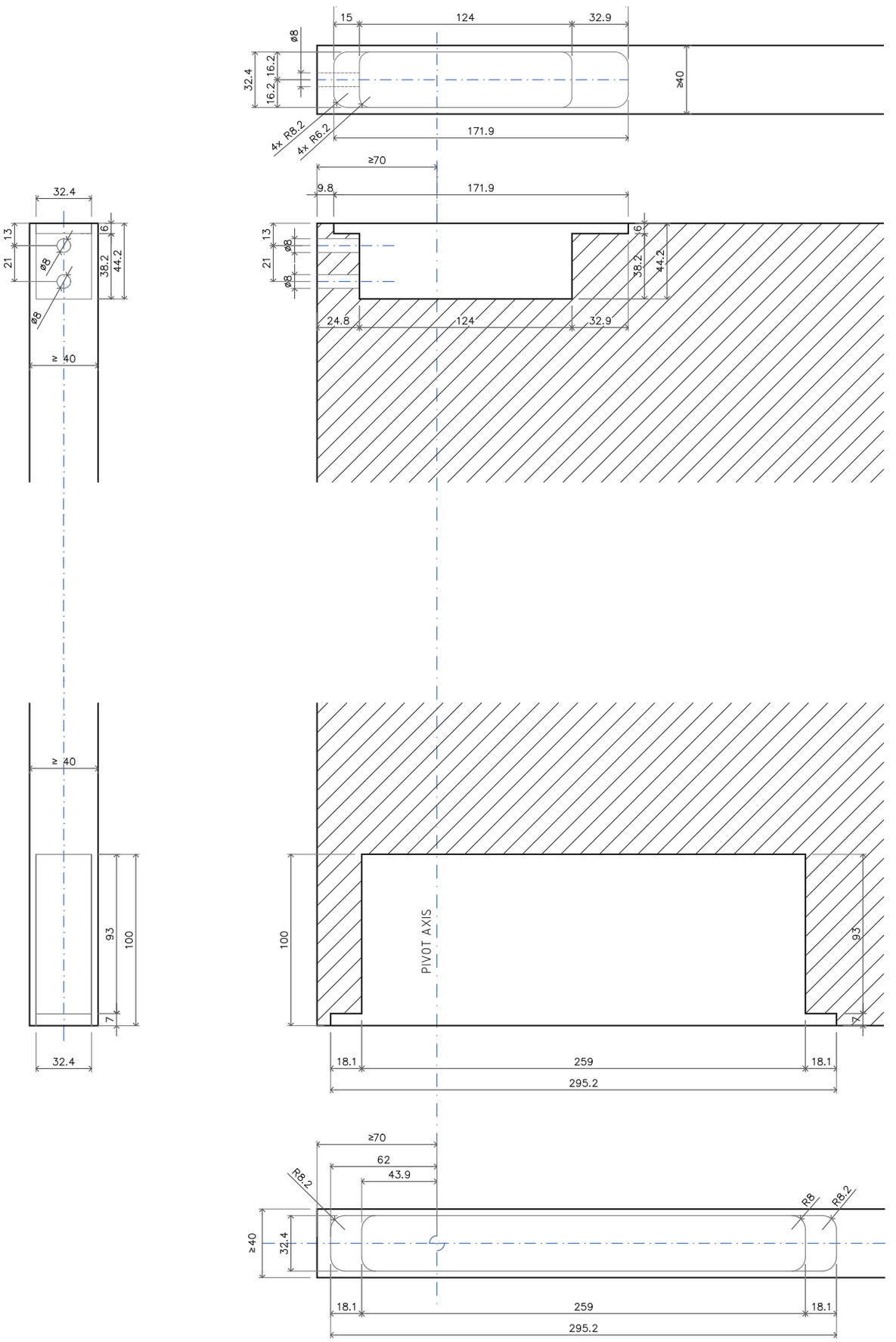

COMPONENTS

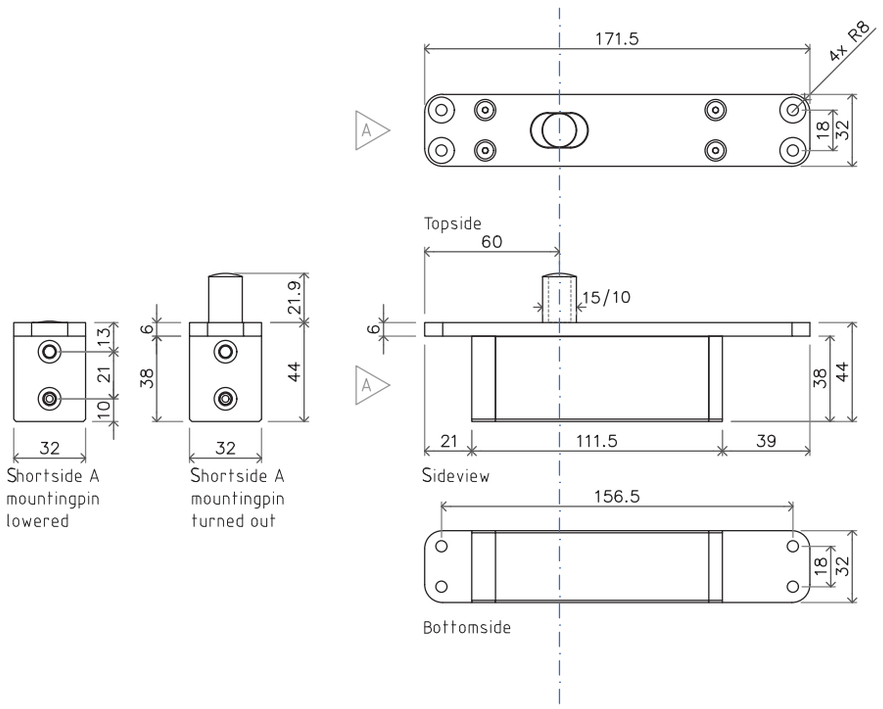

www.fritsjurgens.com/installation-tp70

Top pivot 70 mm - Class B or G

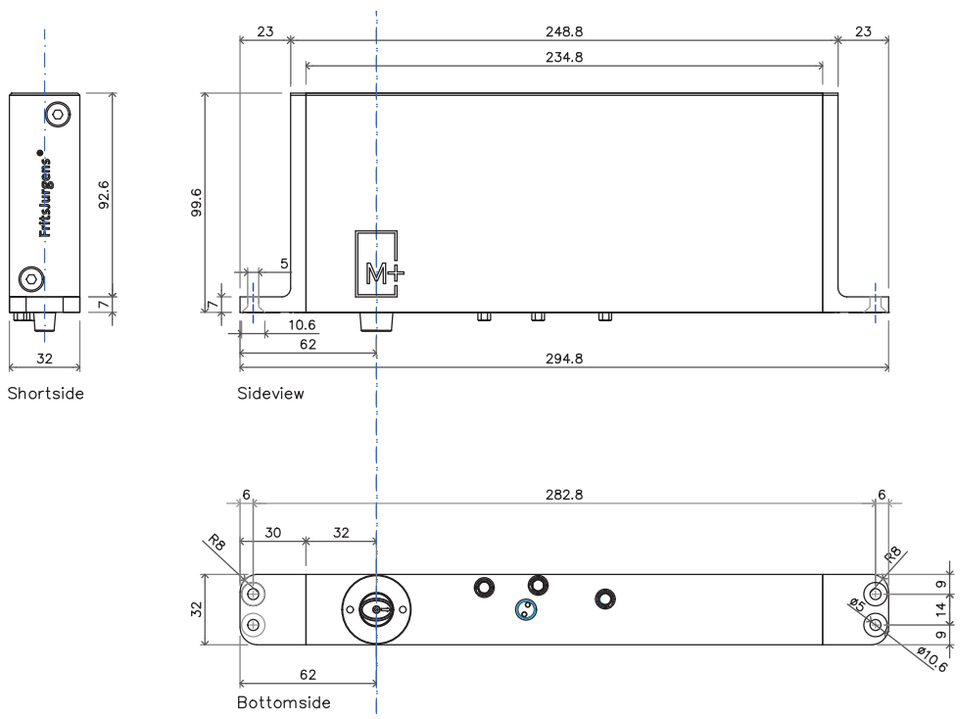

System M 70 mm

System M+ 70 mm

A = 40 MM
PREPARING THE DOOR

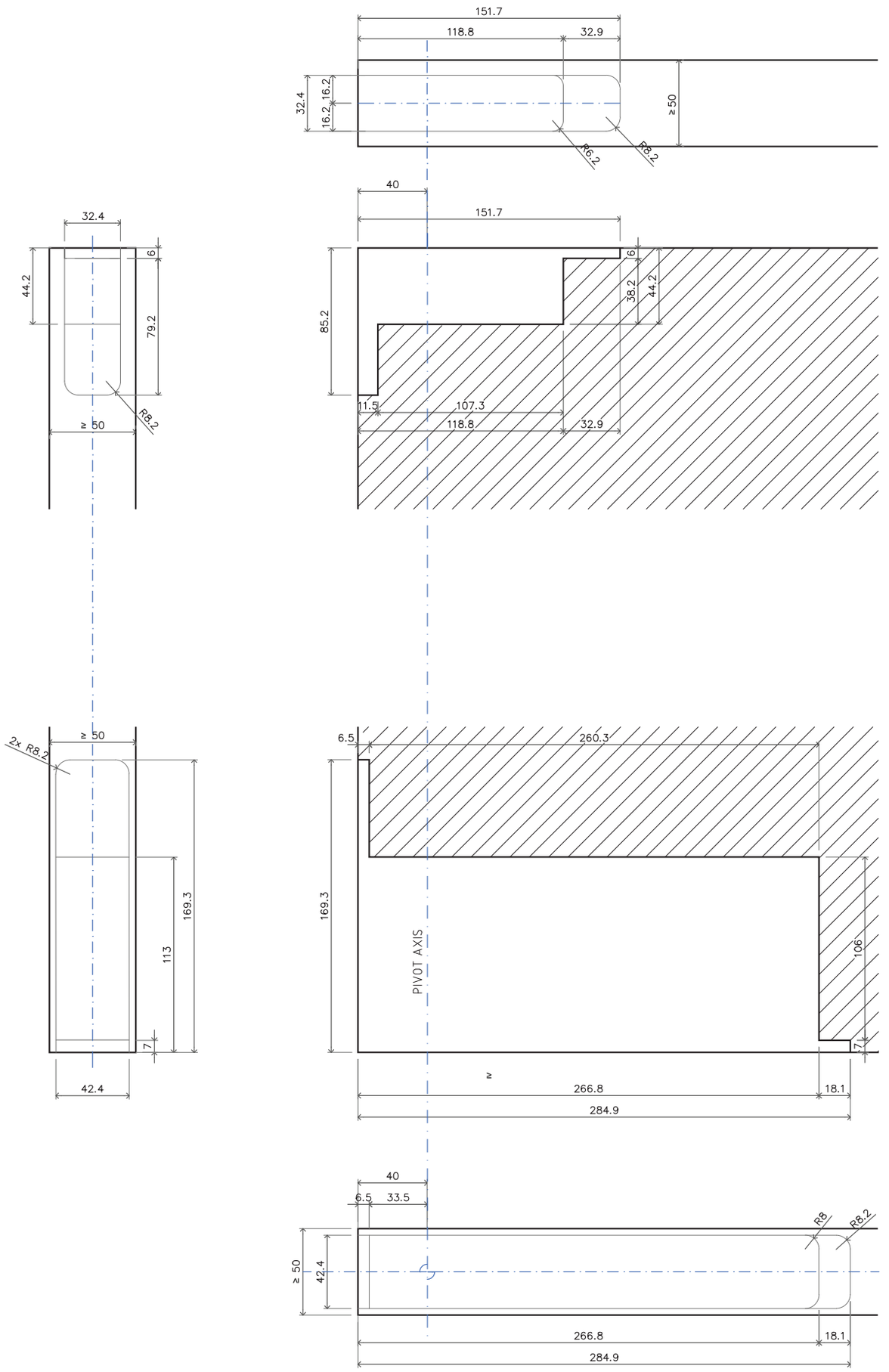

COMPONENTS

www.fritsjurgens.com/installation-tp40

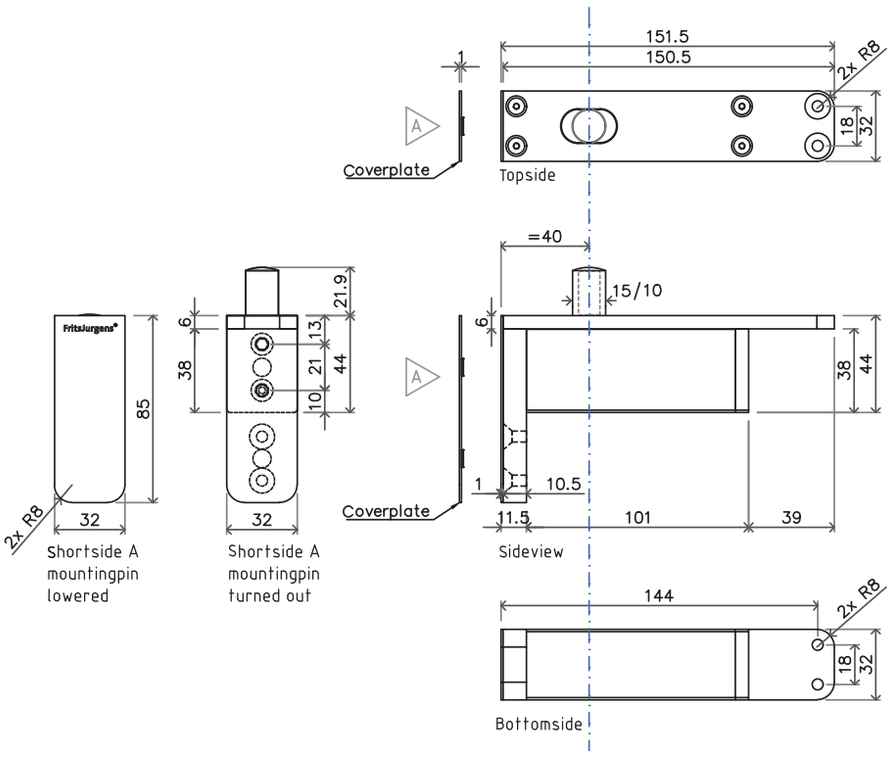

Top pivot 40 mm - Class B or G

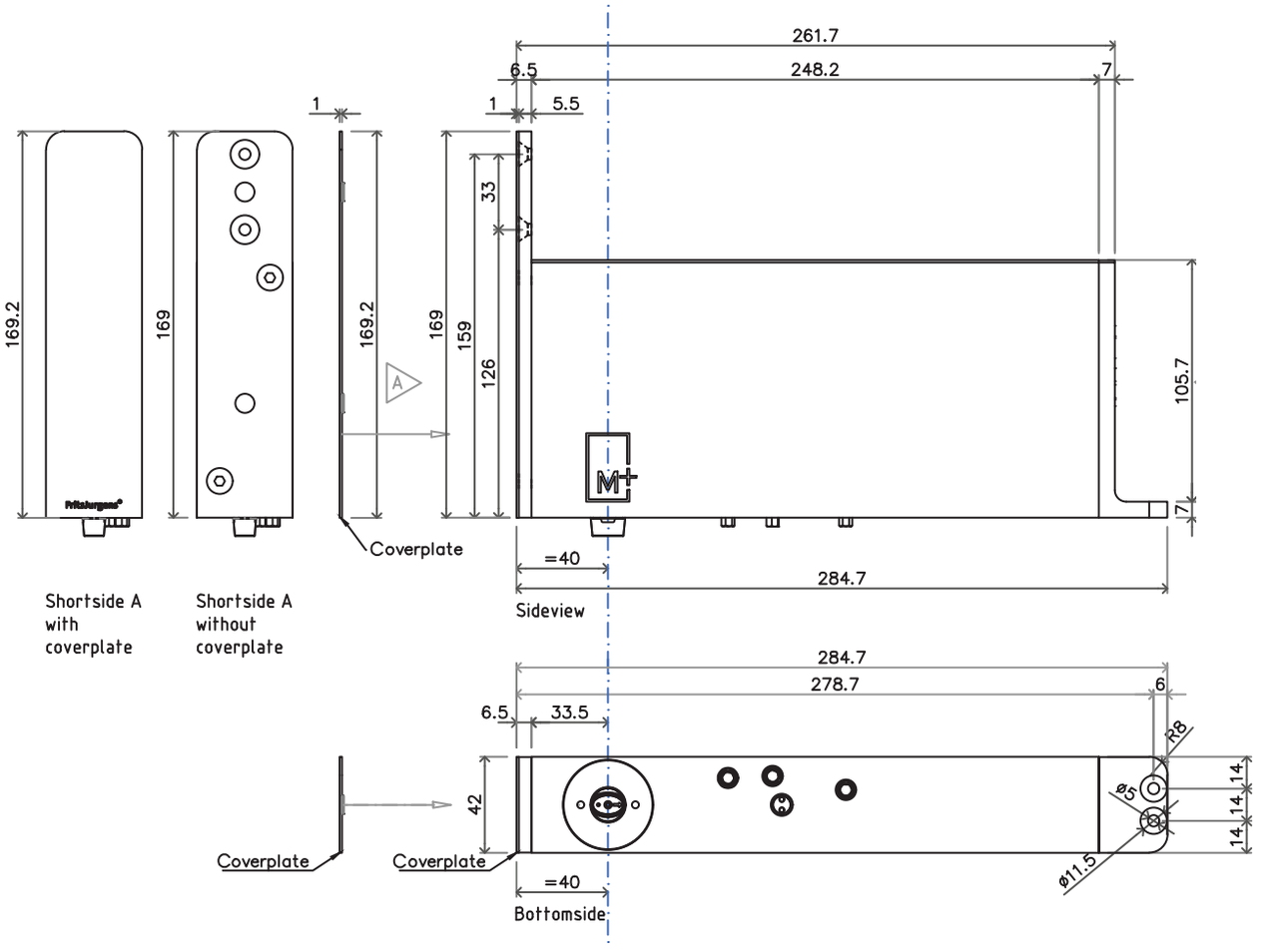

System M+ 40 mm - Class F and G

70MM ≤ A < 250 MM
PREPARING THE DOOR

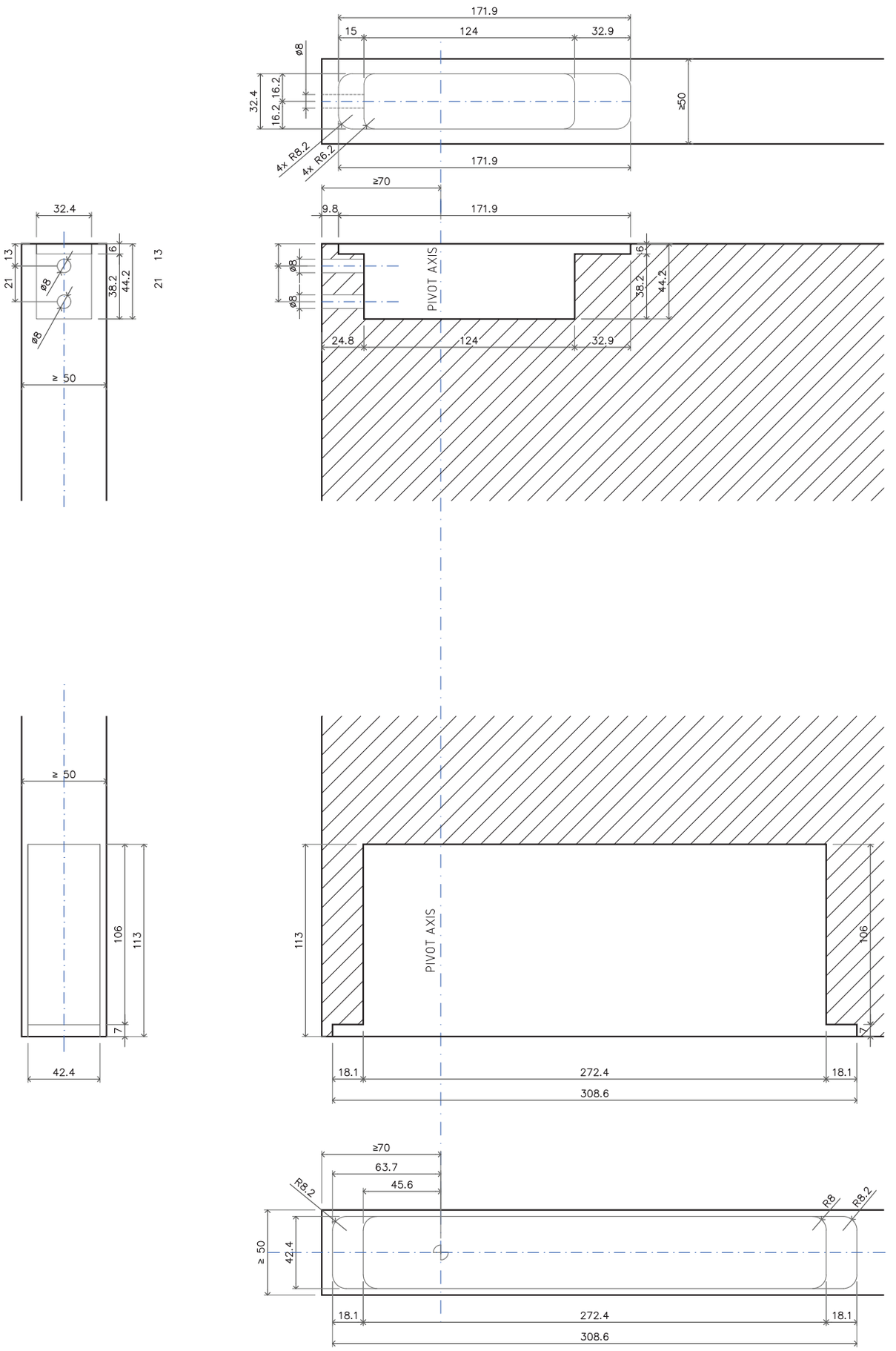

COMPONENTS

www.fritsjurgens.com/installation-tp70

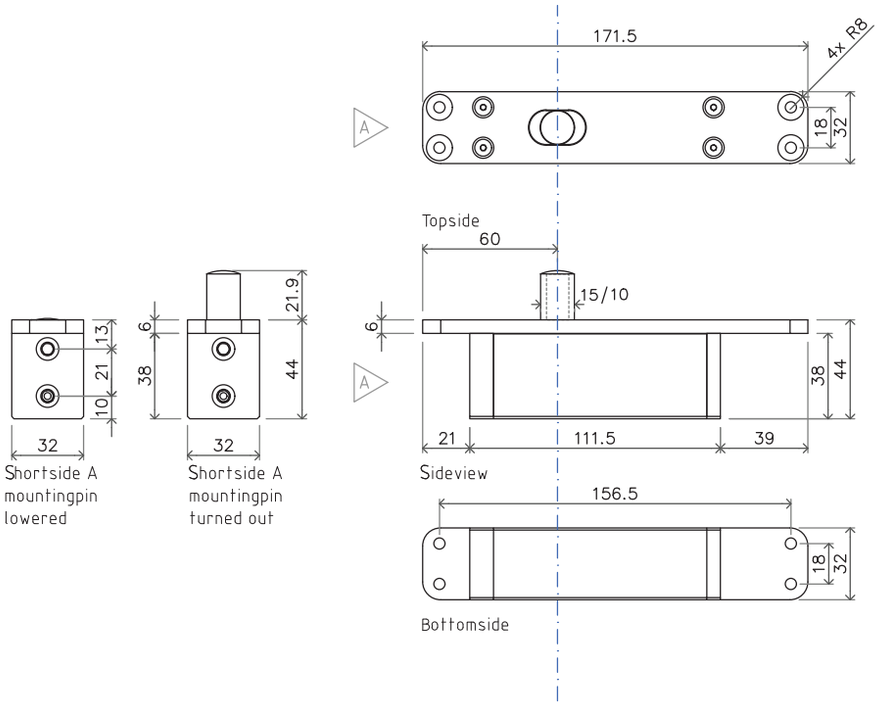

Top pivot 70 mm - Class B or G

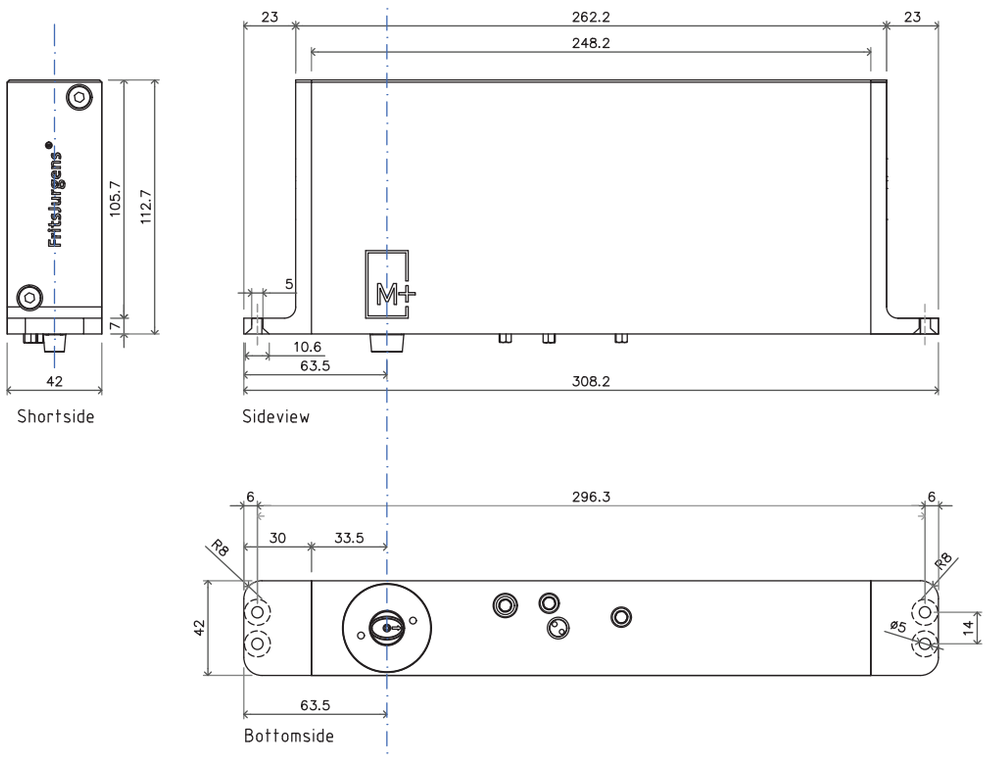

System M+ 70 mm - Class F and G

MILLING

A > 250 MM
SUPPORTING COMPONENTS

6.1 Hexagon Guide 1 m *or*
Hexagon Guide 2 m
6.2 Hexagon 1.1 m *or*
Hexagon 2.1 m
6.3 Screw (4x70) (4x) *or*
Screw (4x70) (6x)

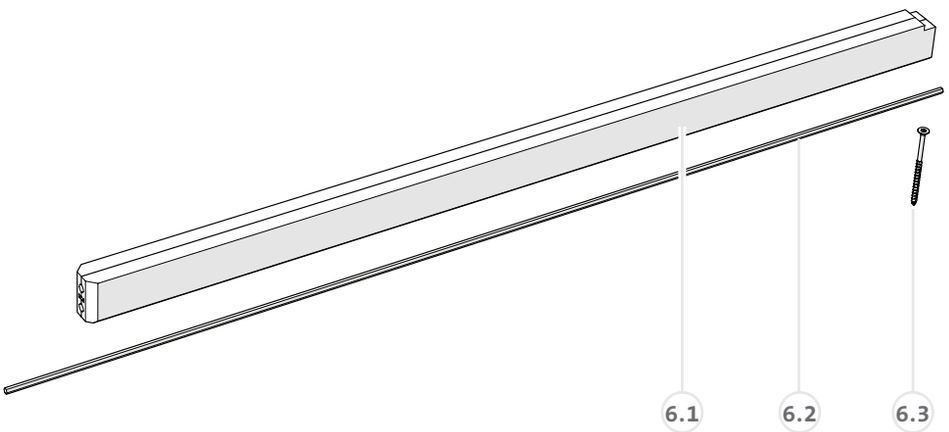

1 Determine Hexagon Guide length **Z**.

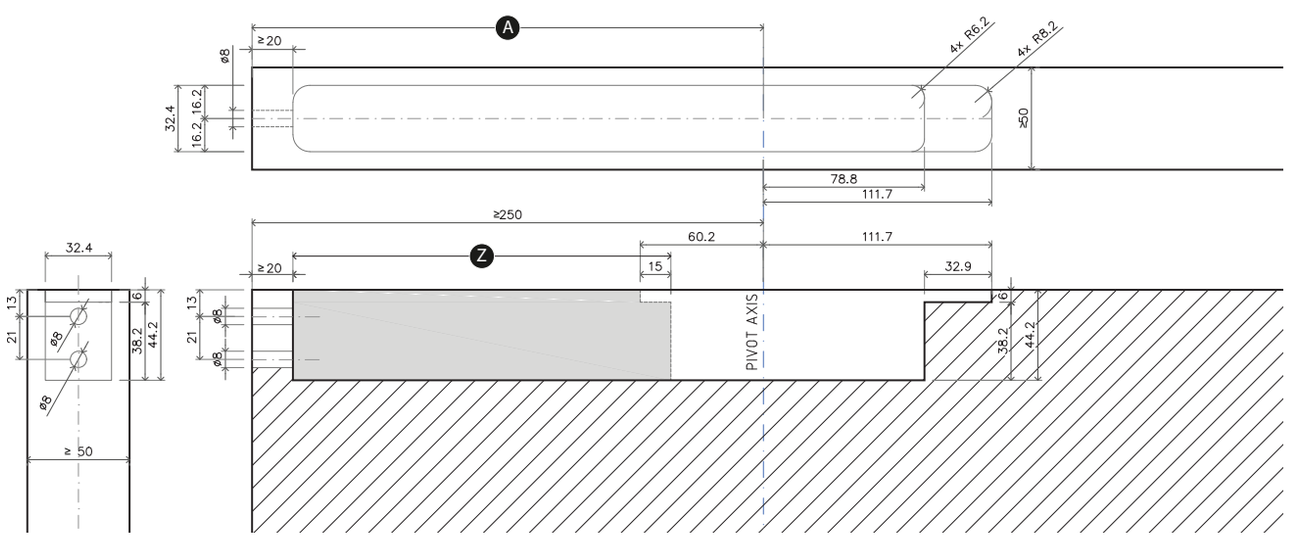

2 Cut the Hexagon Guide to size.

3 Chamfer the sides.

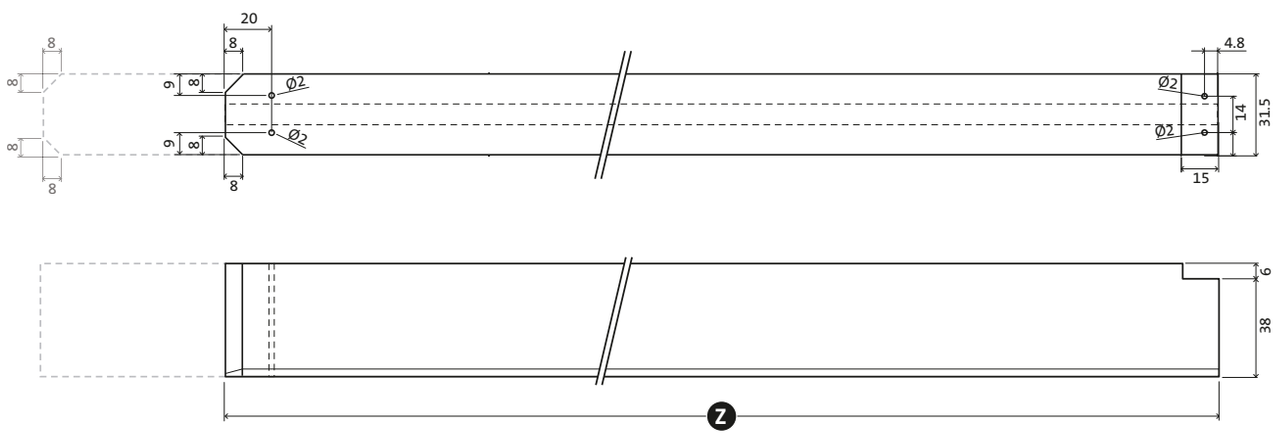

4 Drill holes for the mounting screws*. If you use the 1 m Hexagon Guide, two screws are enough. If you use the 2 m Hexagon Guide, use an extra pair.

5 Mount the Hexagon Guide and the top pivot.

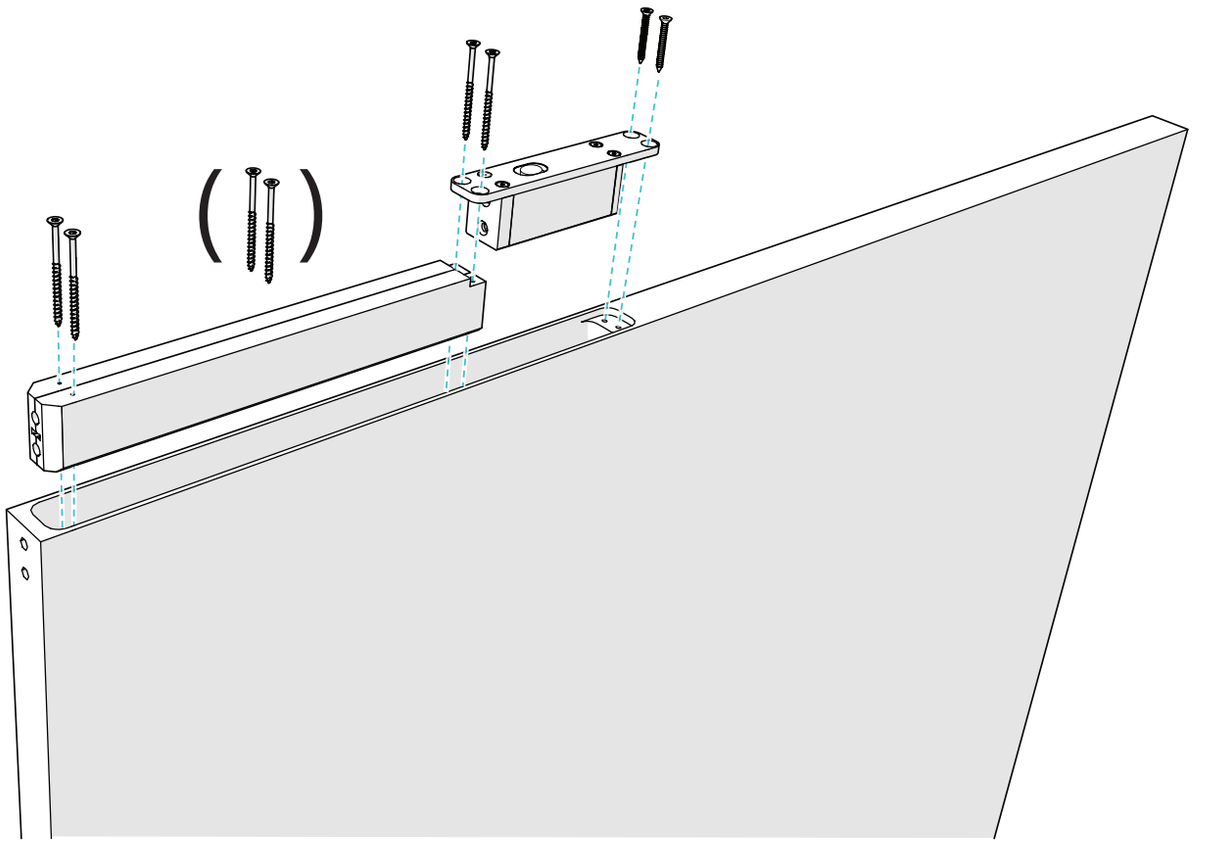

System M+/M - Class AA to E → continue on page **6**
System M+/M - Class F and G → continue on page **10**

* Alternatively, use glue (not included) to mount the Hexagon Guide.

MILLING

TOP PIVOT CABLE GROMMET
PREPARING THE DOOR

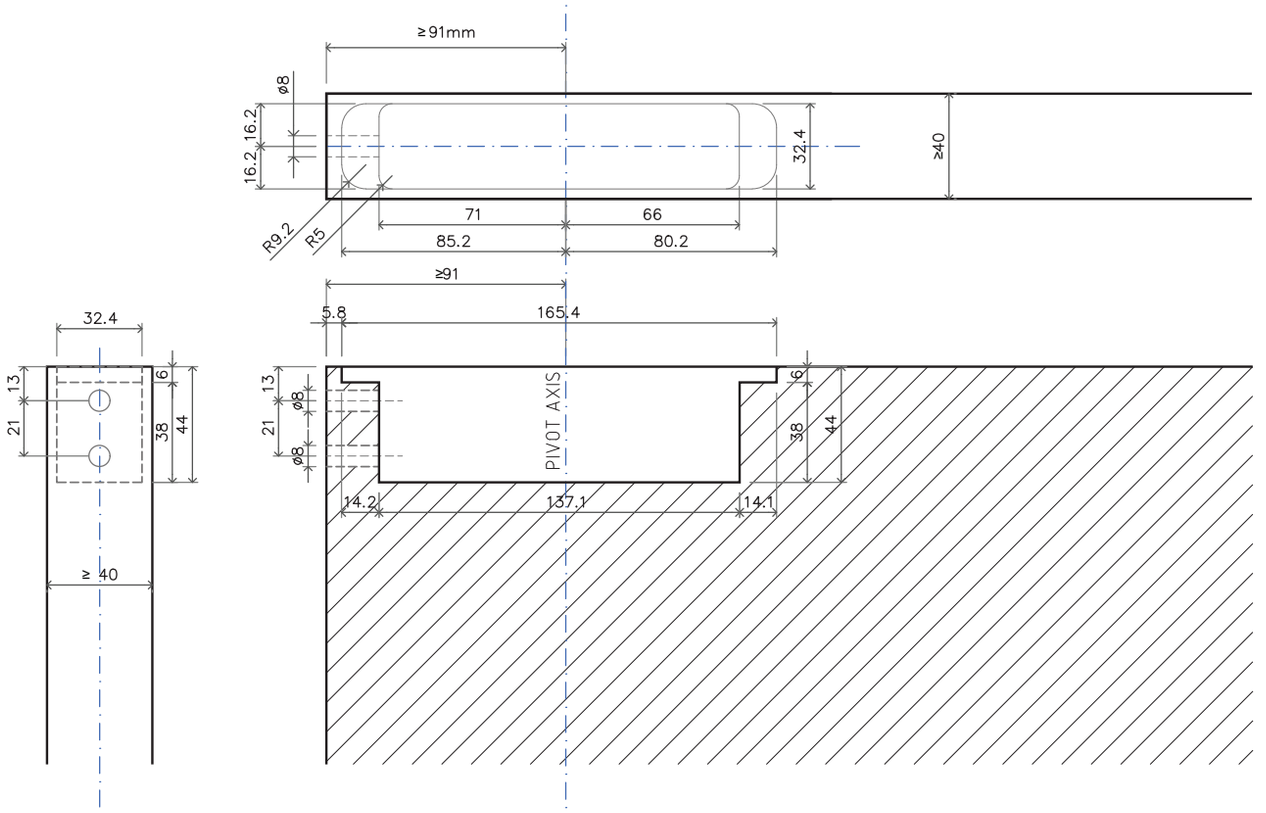

COMPONENT

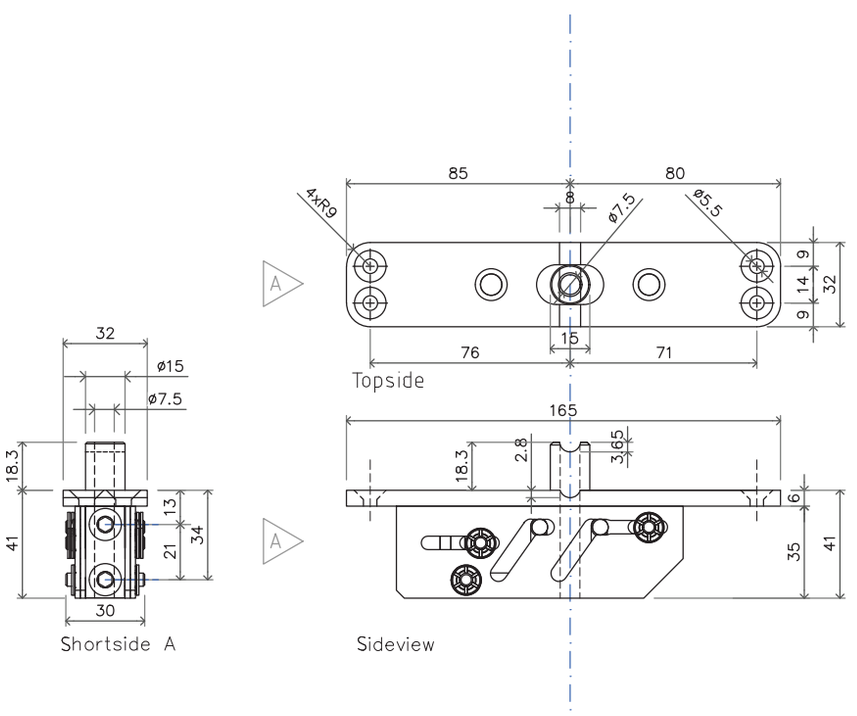

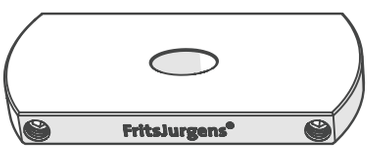

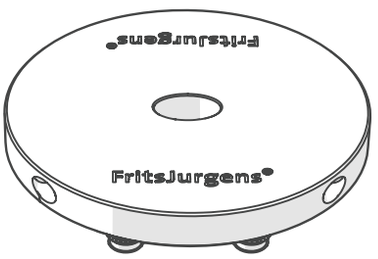

→ page **16**

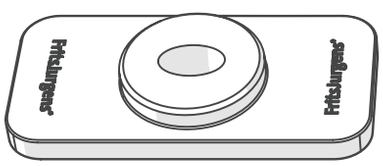

→ page **19**

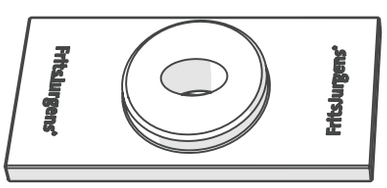

→ page **20**

MOUNTING

FLOOR PLATE SQUARE, FLOOR PLATE ROUND

1 Determine the position of pivot point **A** on the floor. Use the fitting template and the table below.

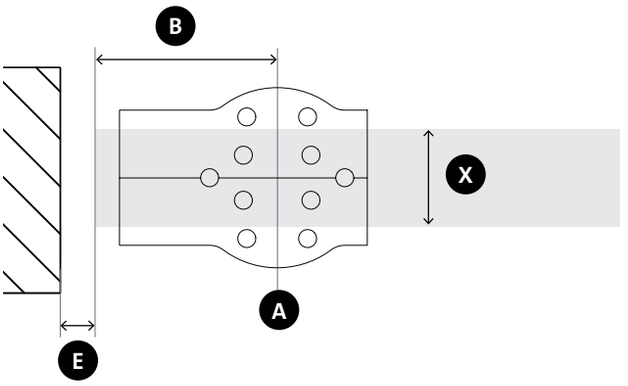

B \ X	40	50	60	70	80	90	100
40	7	9	12	15	19	22	26
70	5	6	10	10	13	15	18
91	4	5	7	9	10	12	15
250	3	3	4	4	5	6	7
500	2	3	3	3	4	4	5
1000	2	2	3	3	3	3	3
1500	2	2	2	2	2	3	3
2000	2	2	2	2	2	2	3

E

E Minimum gap between door and wall (mm)

B Distance pivot point to door edge (mm)

X Door thickness (mm)

2 Mark pivot point **A** on the floor and on the ceiling.

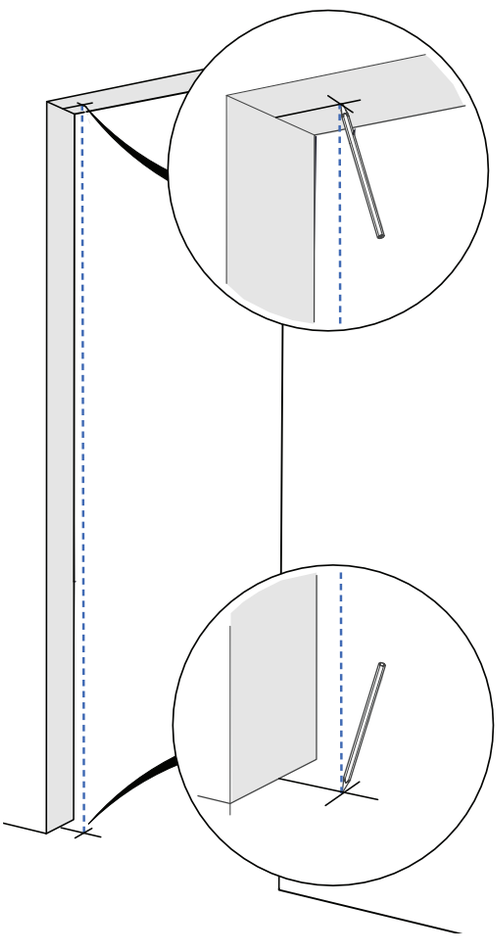

3 Mark the drilling holes on the floor. Use the fitting template.

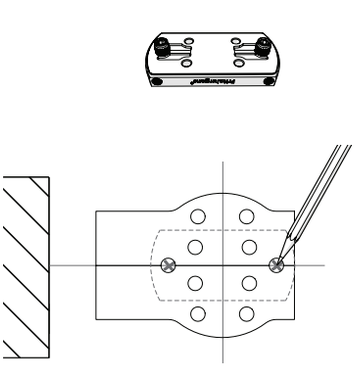

Floor plate square, one floor type

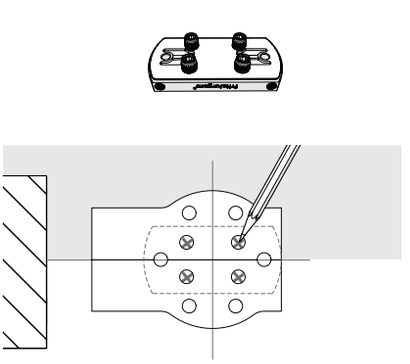

Floor plate square, two floor types

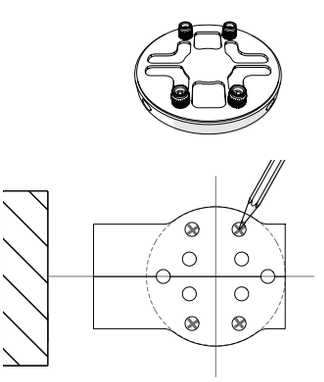

Floor plate round, one or two floor types

4 Select the correct drill bit for the floor and determine the drilling depth.

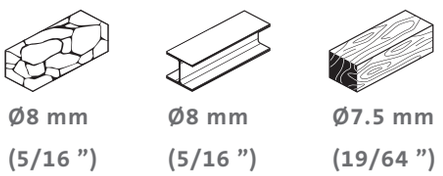

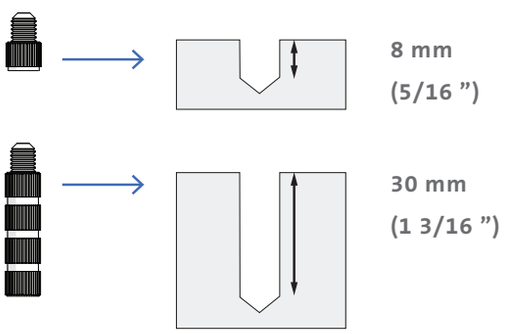

5 Drill the holes in the floor on the marked spots.

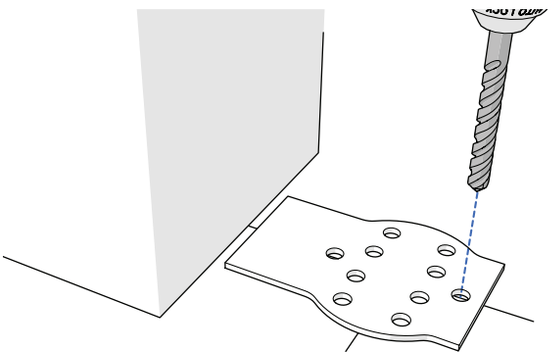

6 Determine the pin configuration for your situation. If necessary, use Allen key 3 to unmount the pre-installed pins and install the correct configuration.

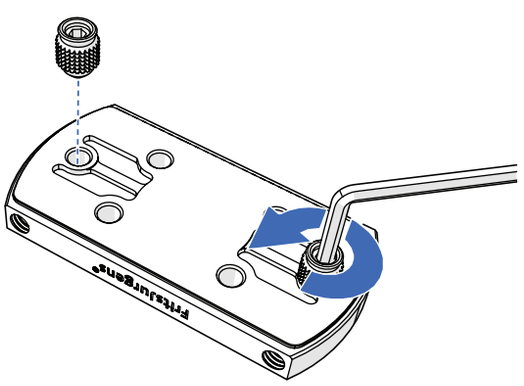

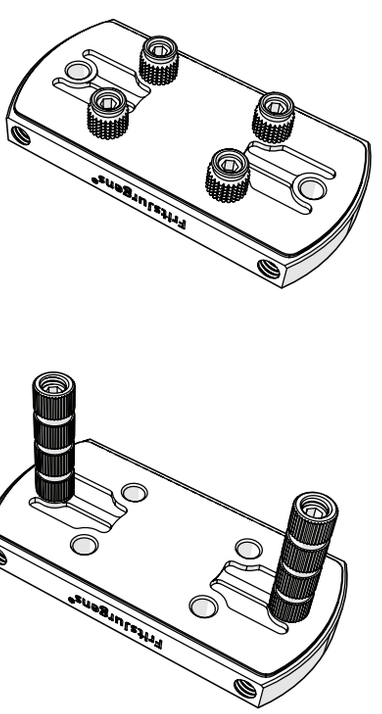

7 Fill the glue chambers in the floor plate with glue and apply a 1 mm layer of glue* in between the chambers.

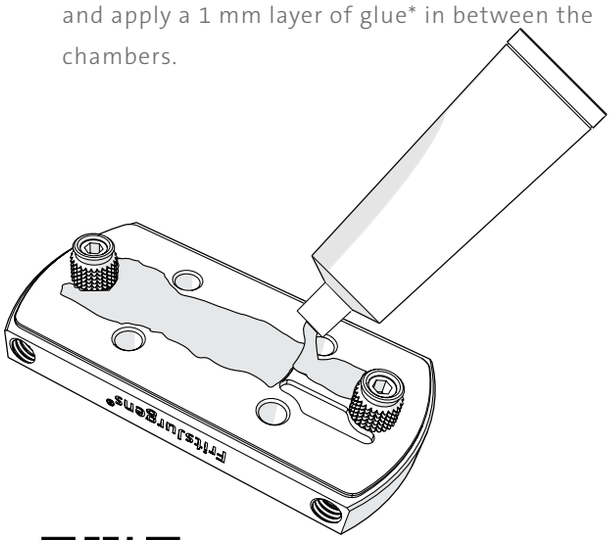

8 Add glue in the holes in the floor. Make sure the holes don't overflow when you place the floor plate.

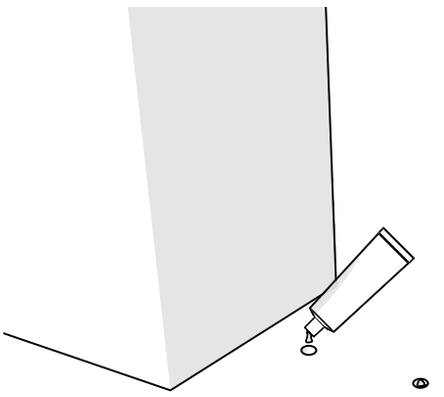

* Scan the QR code for information about drying time and glue specifications.

9 Use a rubber hammer to affix the floor plate.

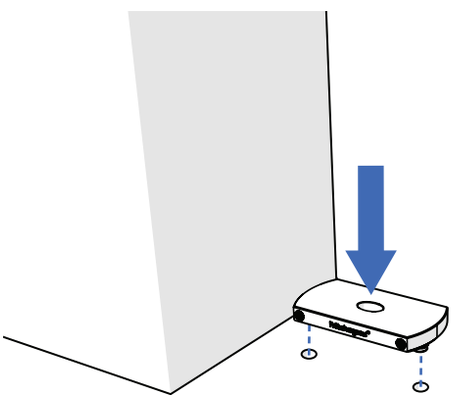

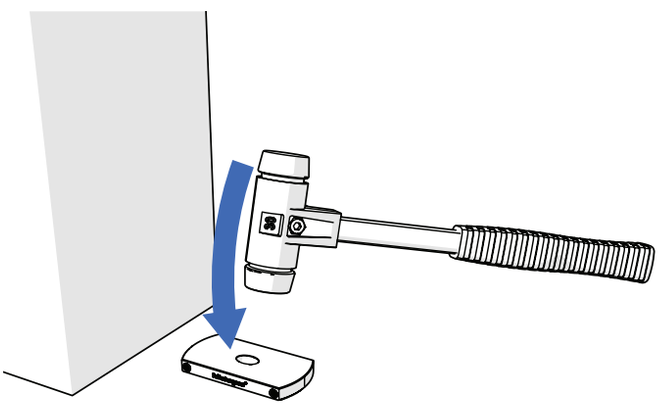

→ continue on page **21**

FLOOR PLATE FLUSH ROUNDED
PREPARING THE FLOOR OR SILL

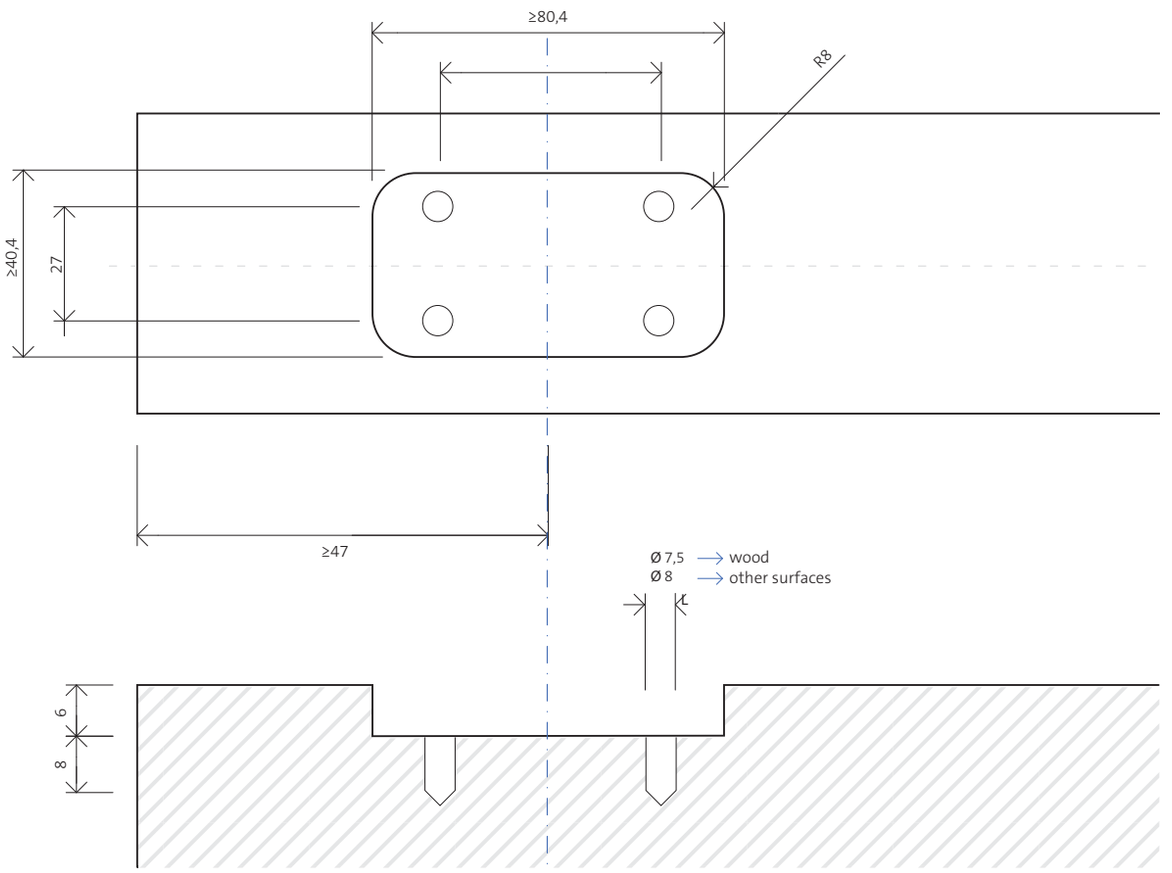

DIMENSIONS

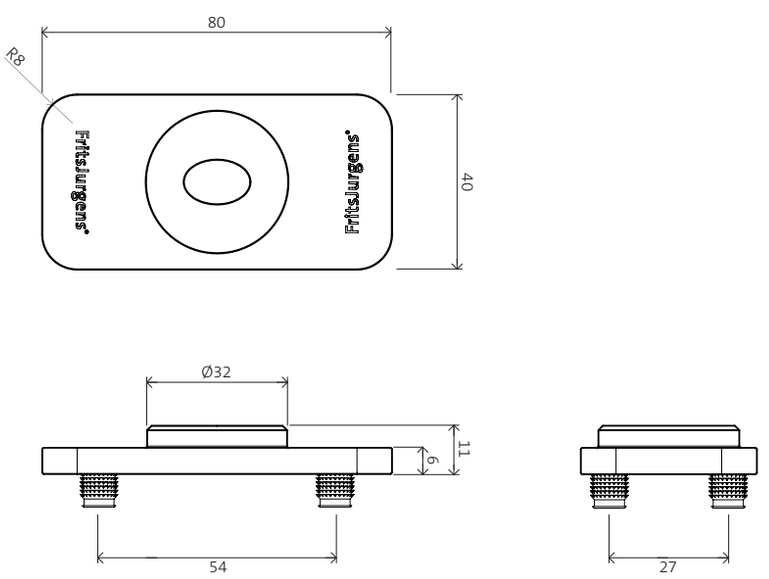

→ follow steps 7, 8 and 9 on page **18**

MOUNTING

FLOOR PLATE FLUSH SQUARE
PREPARING THE FLOOR OR SILL

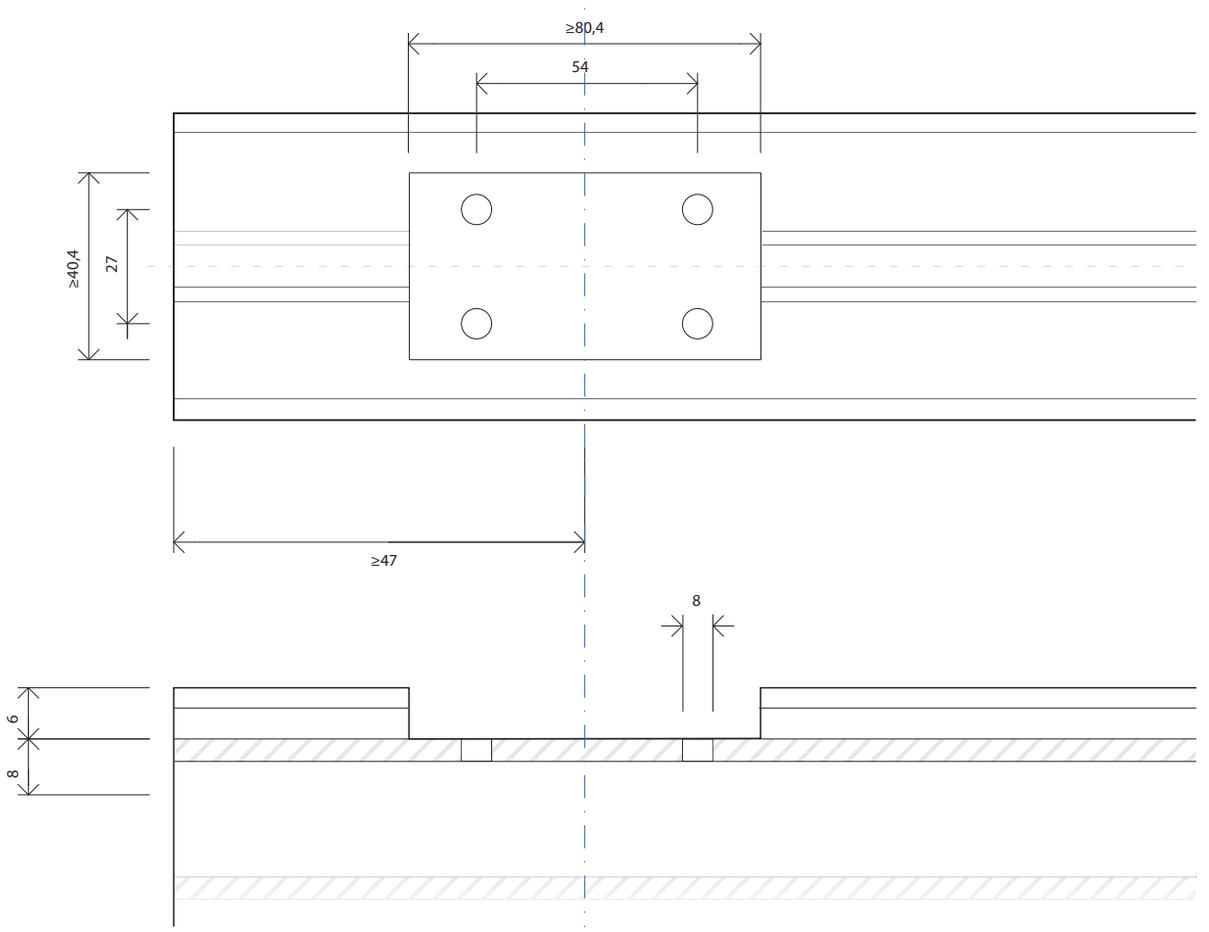

DIMENSIONS

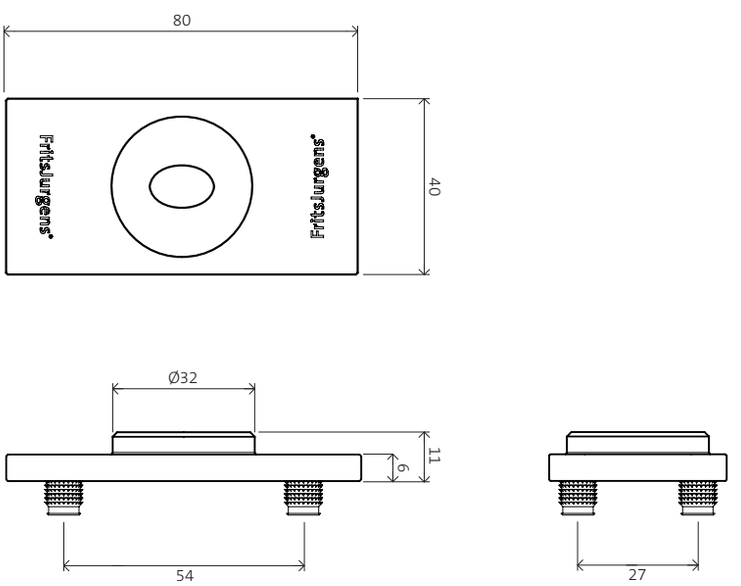

→ follow steps 7, 8 and 9 on page **18**

CEILING PLATE

1 Drill a hole for the ceiling plate.

		Depth	Diameter
Ceiling plate 10 mm pin	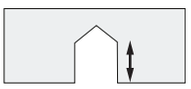	**20 mm (25/32 ”)**	**Ø18 mm (45/64 ”)**
Ceiling plate 15 mm pin	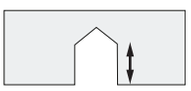	**20 mm (25/32 ”)**	**Ø20 mm (25/32 ”)**
Ceiling plate cable grommet		**N.A.**	**Ø21 mm (45/64 ”)**

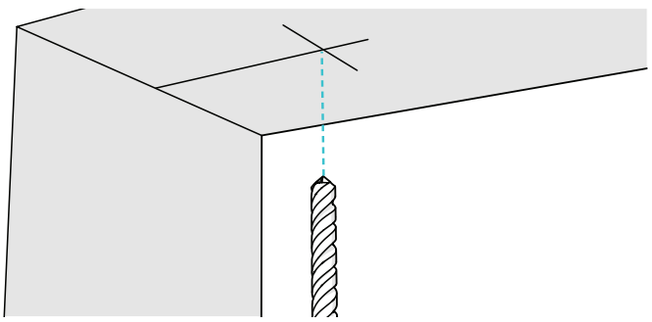

2 Apply a 1 mm thick layer of glue to the ceiling plate.

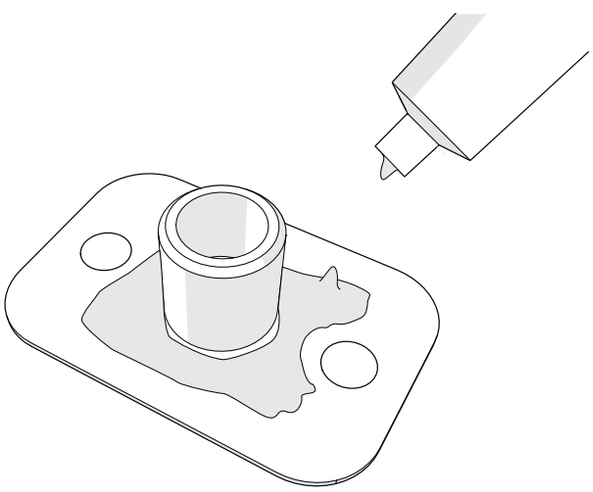

3 Affix the ceiling plate.

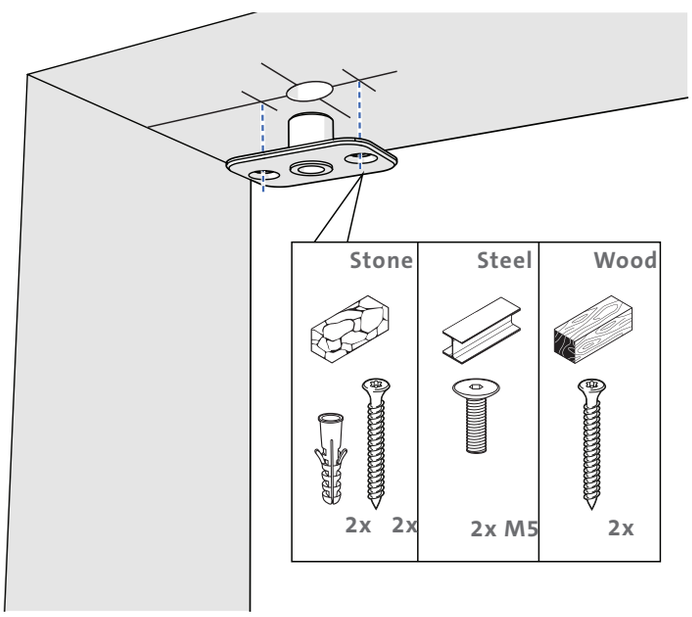

DIMENSIONS

Ceiling plate - Class G

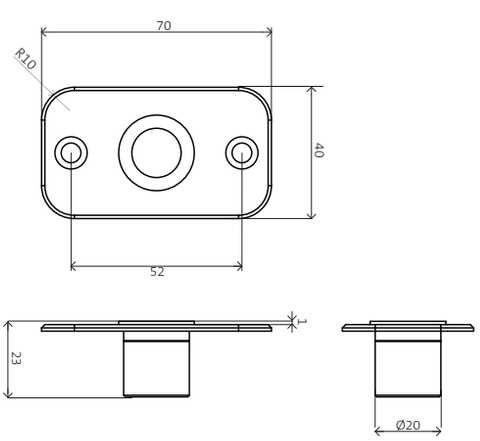

Ceiling plate - Class B

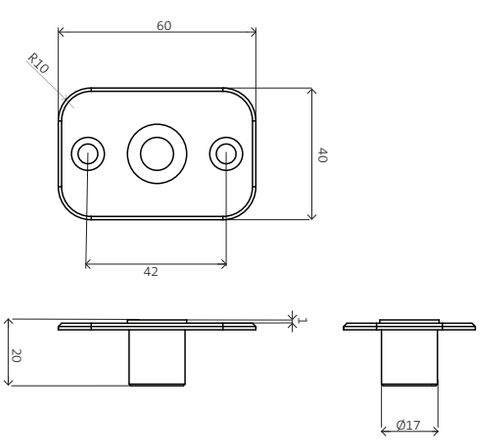

MOUNTING

DOOR

1 Determine in which direction you will install the door. Turn the arrow on the system's spindle so it points to the latch side of the door when you install it. You can do this with the axle wrench or floor plate.

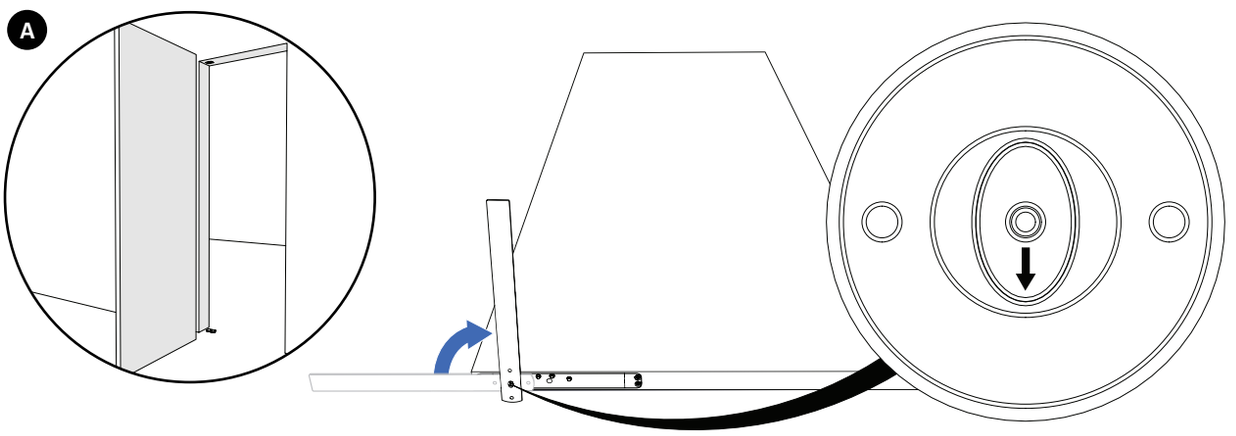

PAY ATTENTION

If you need to take the door out of the floor plate during the mounting process, always put it back the same way. If you do not do that, the arrow will point in the wrong direction, and the system will not function correctly.

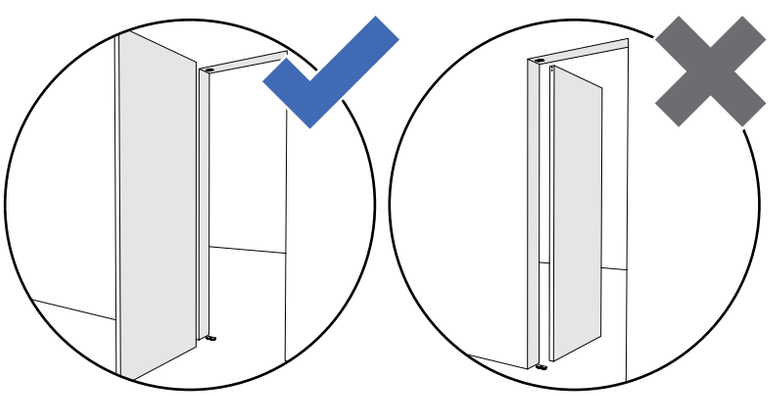

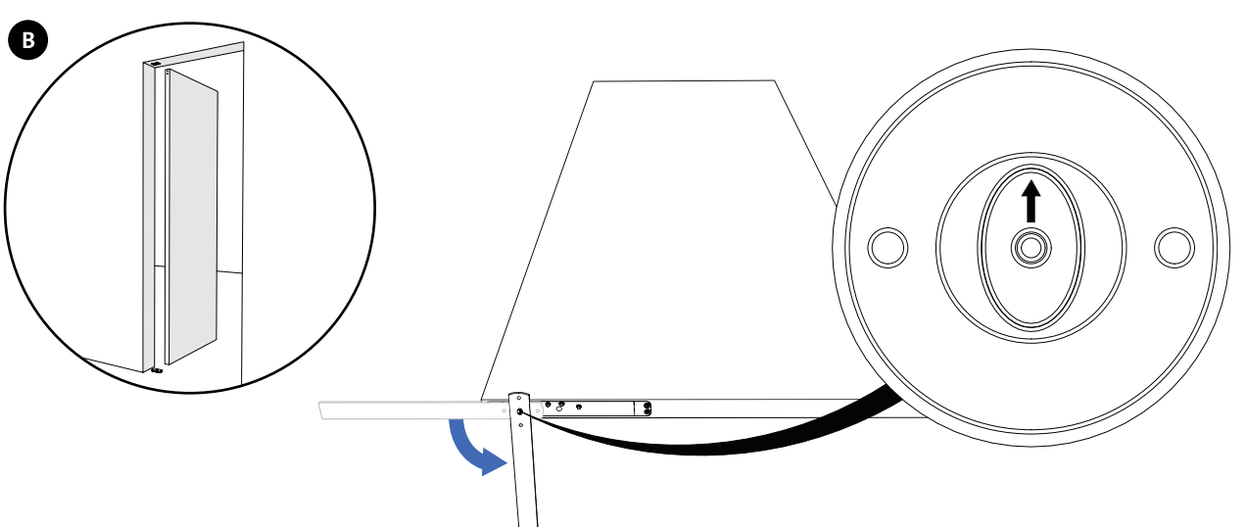

PAY ATTENTION

If you need to take the door out of the floor plate during the mounting process, always put it back the same way. If you do not do that, the arrow will point in the wrong direction, and the system will not function correctly.

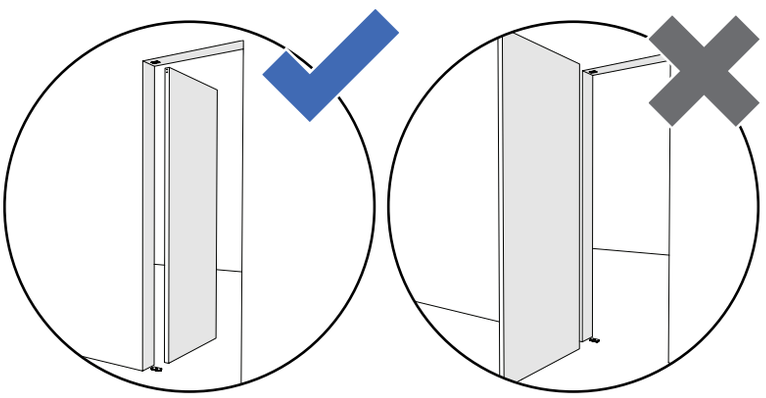

2 Position the door on the floor plate and align it with the ceiling plate.

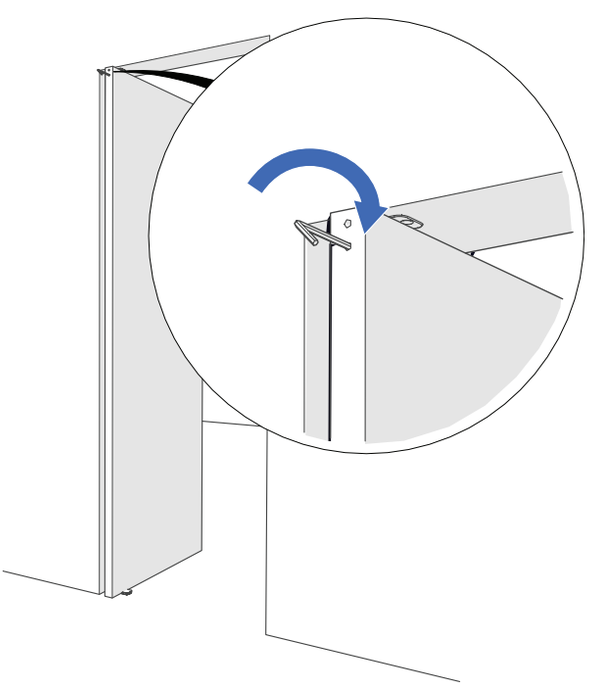

3 Extend the pivot with Allen key 5 or use the Hexagon Guide (page 12, item 6.2).

Top pivot 40 mm / 70 mm → Turn the key **8** times.

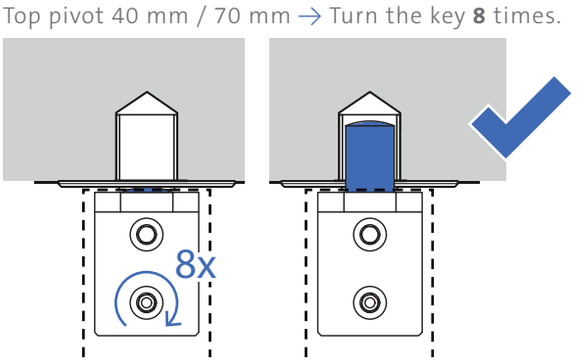

Top pivot cable grommet → Turn the key **16** times.

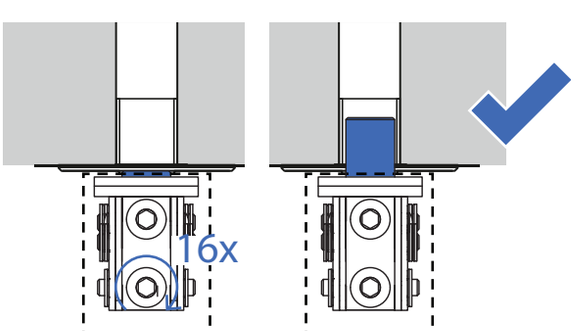

FINE-TUNING RADIAL POSITION*

1 Check the radial alignment of the door.

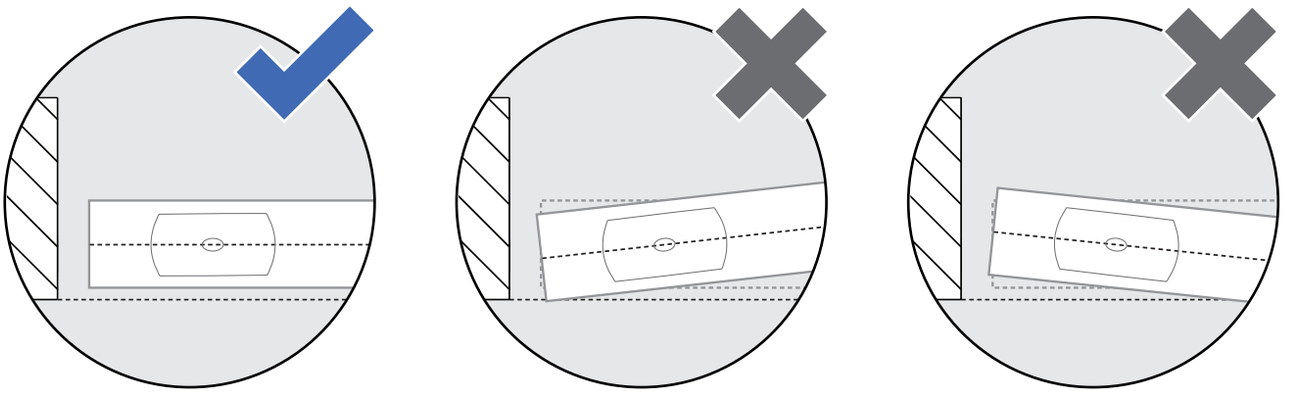

2 If the door is not properly aligned, unlock the floor plate with Allen key 3.

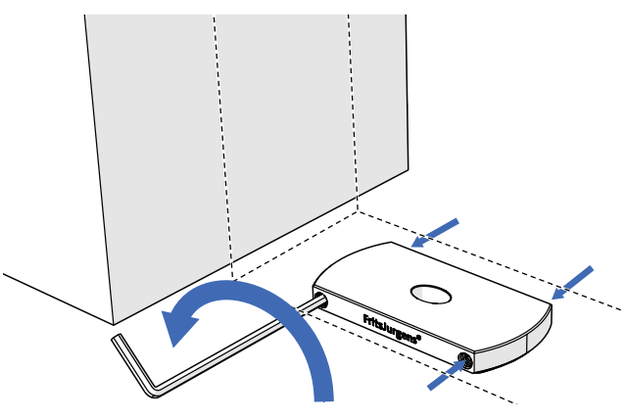

3 Rotate the floor plate until the door is aligned parallel to the wall.

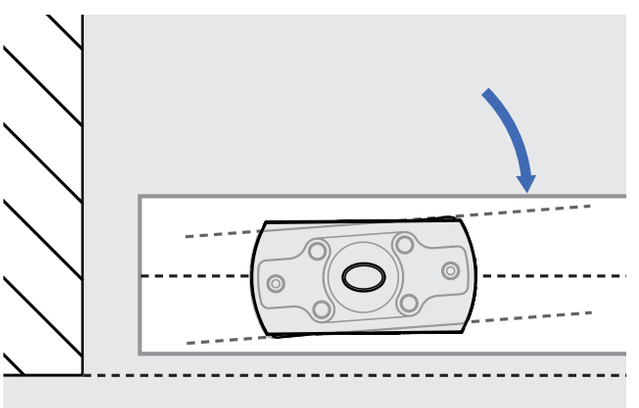

4 Lock the floor plate.

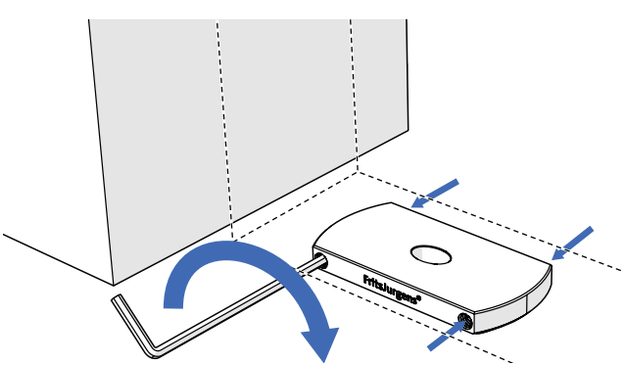

* Does not apply to floor plate Flush

FINE-TUNING THE CLOSING SEAM

1 Check if the door is aligned parallel to the ceiling and the wall.

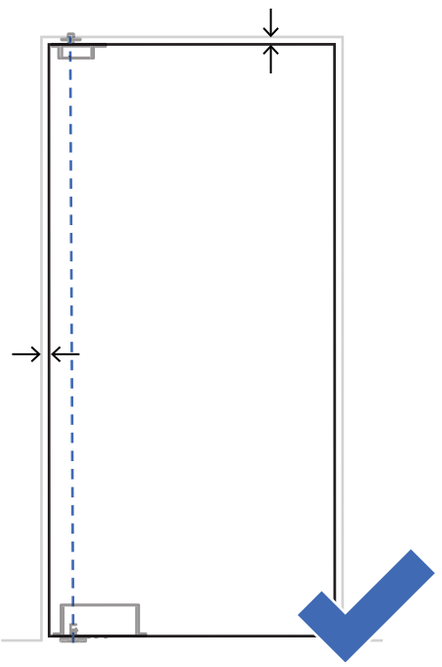

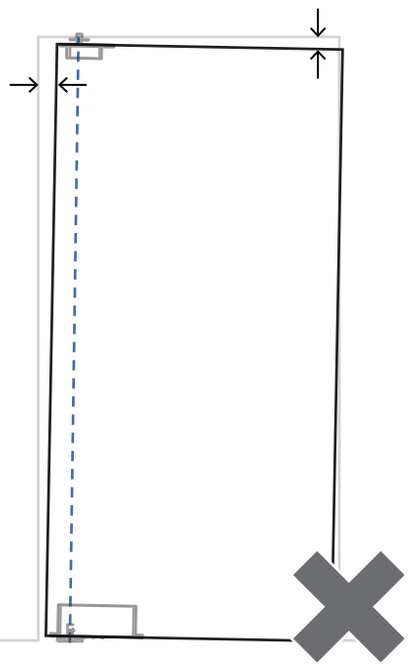

2 Open the door. Use Allen key 5 or the hexagon (page 12, item 6.2) until the door is aligned parallel to the ceiling and the wall.

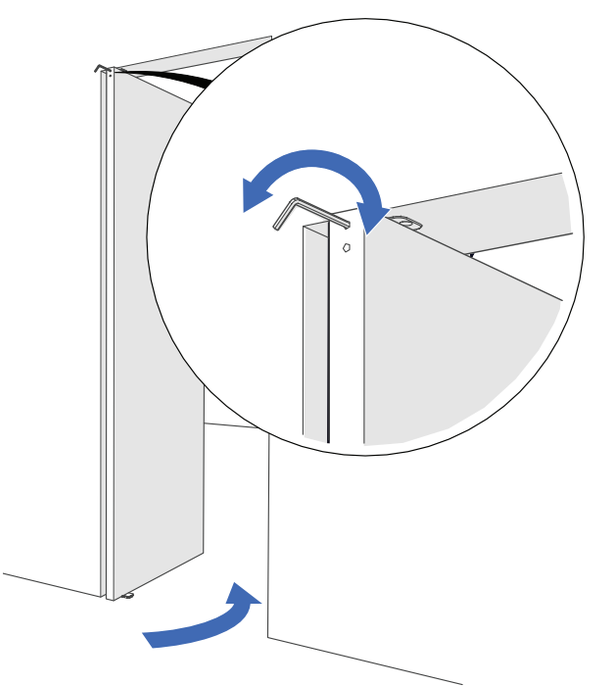

FINETUNING MOVEMENT

1 Use the reference sheet and the adjustment spanner to finetune the movement of the door.

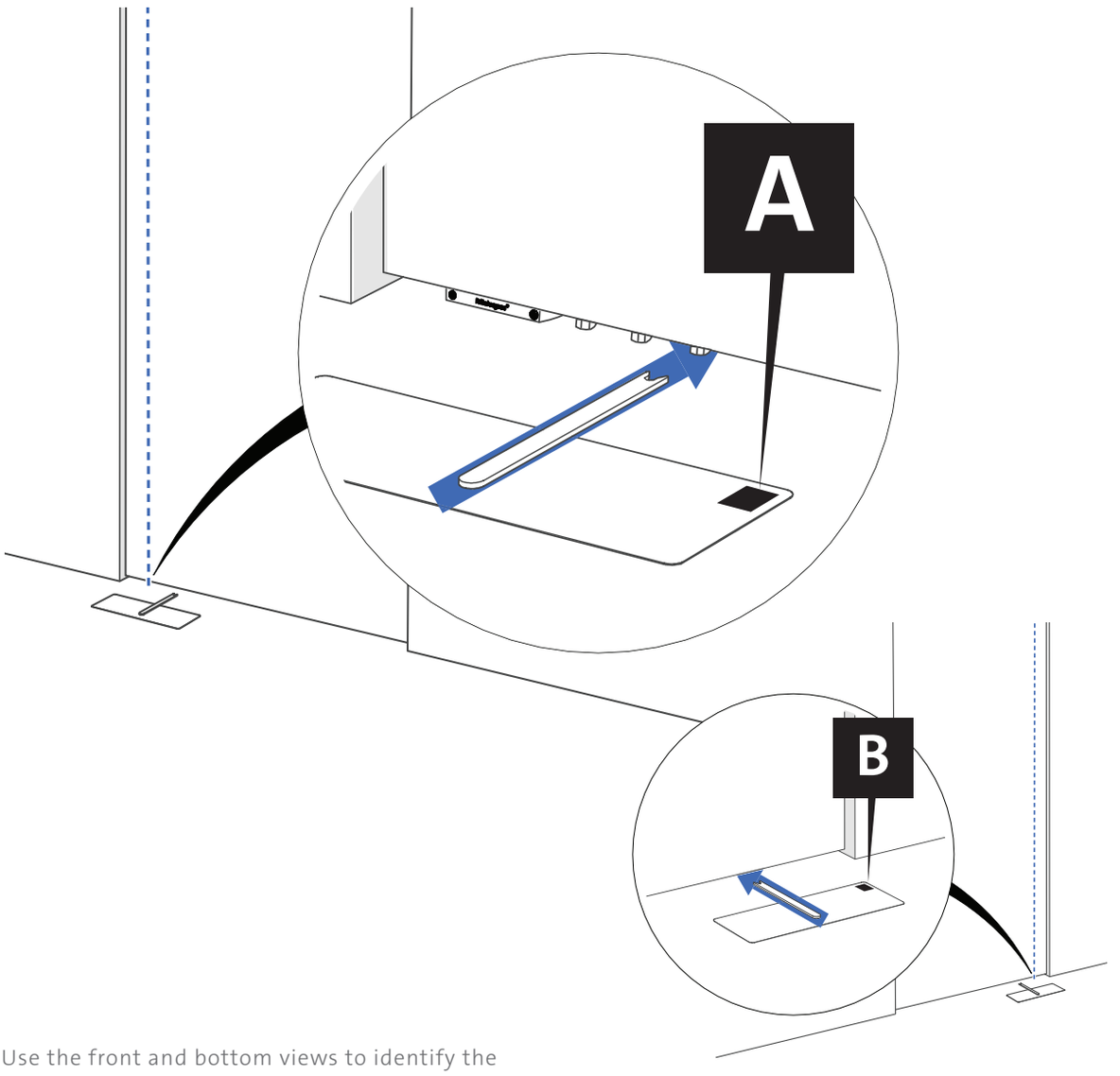

Use the front and bottom views to identify the adjustment screws.

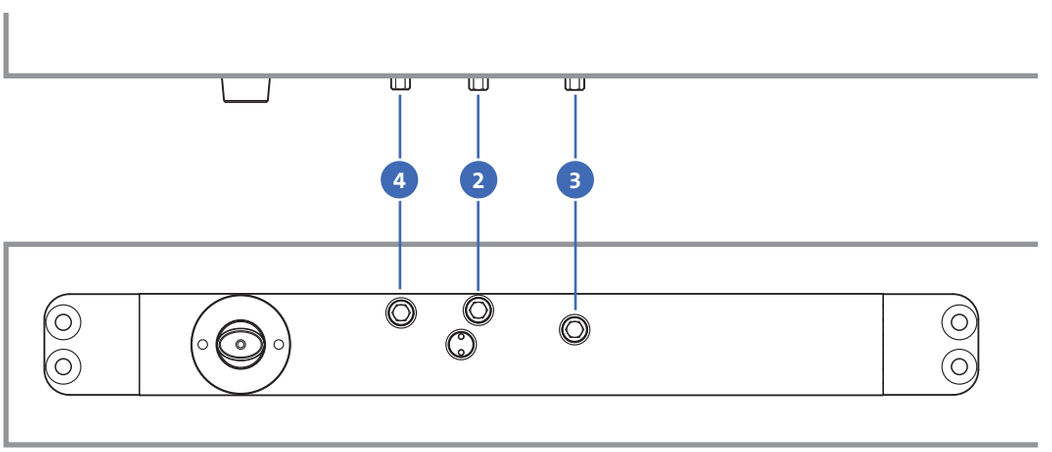

Beware! Rotate the adjustment screws incrementally with steps of ***≈ 10 degrees*** at a time. To return the door's adjustments to factory settings continue to 'Reset the system' on page 27.

2 Adjust **Damper Control** to determine the door's opening speed (hydraulic backcheck).

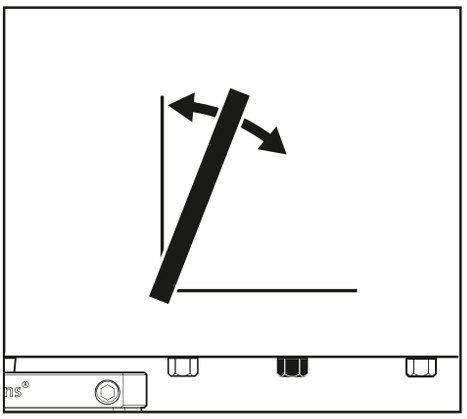

3 Adjust **30° Speed Control** to determine the door's speed in the last 30° of the closing movement.

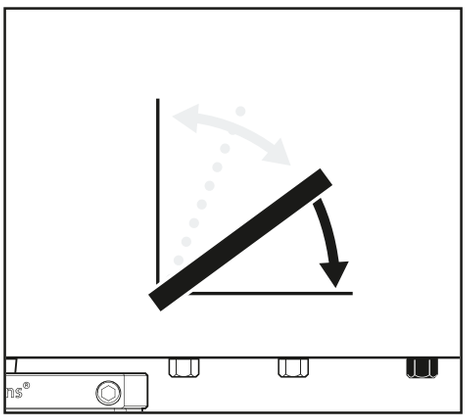

4 If your door has latching bolts, use **Latch Control** to make sure the door latches properly.

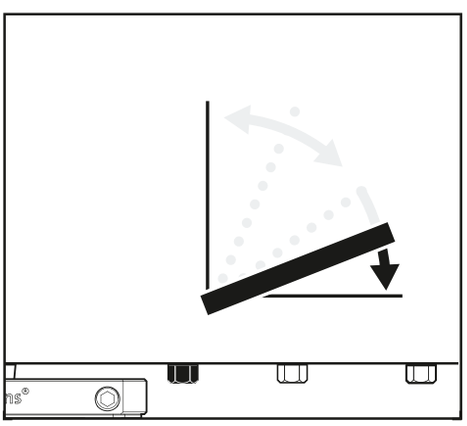

RESET THE SYSTEM

1 Closing all of the adjustment screws by turning them towards the tortoise (counterclockwise) until you feel a slight resistance.

2 Open the adjustment screws (clockwise) to the correct angle as shown in the table below.

System	Latch	Speed	Damper
System M32	-	-	180 degrees
System M32+	If necessary: 180 degrees	90 degrees	180 degrees
System M42+	If necessary: 180 degrees	90 degrees	270 degrees

For more information, scan the QR code:

FritsJurgens®

FRITSJURGENS INTERNATIONAL

A. Einsteinlaan 1

9615 TE Kolham

The Netherlands

+31 598 343 410

info@fritsjurgens.com

FRITSJURGENS ITALIA (COMMERCIAL OFFICE)

Via Marsilio Ficino 22

50132 Firenze

Italy

+39 055 064 0290

info@fritsjurgens.com

FRITSJURGENS CONSULTING FZE (REGIONAL SALES OFFICE)

Premises No. HD67

Floor 25

Sheikh Rashid Tower

Dubai World Trade Centre

Dubai UAE

FJ.IN.M.EN.2022

copyright © FritsJurgens®

17-04-2023

8 720681 618487 >